AA-M33

AKAI SERVICE MANUAL

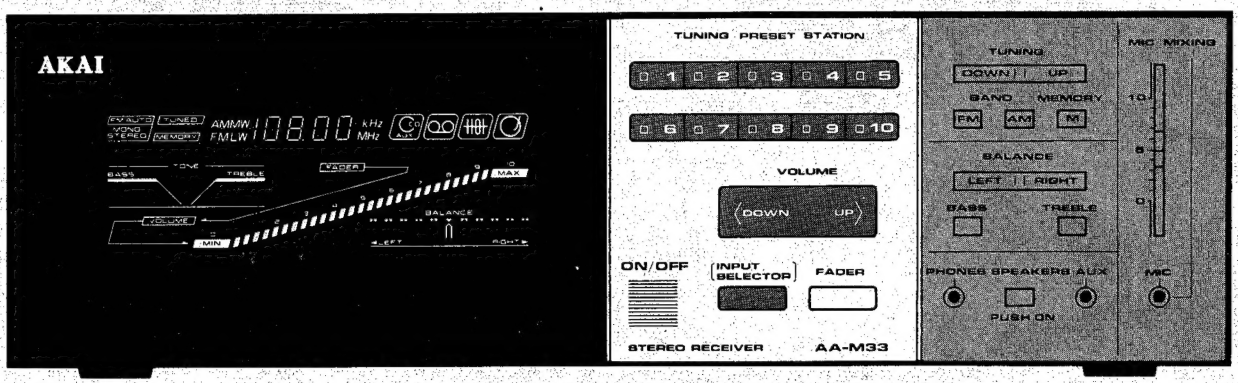

STEREO RECEIVER

MODEL AA-M33

ABBREVIATIONS FOR SERVICE MANUAL
MODEL AA-M33

ABBREVIATION	EXPLANATION	ABBREVIATION	EXPLANATION
AC	Alternating Current	LED	Light Emitting Diode
AF	Audio Frequency	LPF	Low Pass Filter
AFC	Automatic Frequency Control	LSI	Large Scale Integration
ALC	Automatic Level Control	LW	Long Wave
AM	Amplitude Modulation	MC	Memory Control
ANT	ANTenna	MIX	MIXer
APPROX	APPROXimately	M, ME	Memory (MEmory)
BUF	BUFfer	MONO	MONOphonic
C	Control	MPX	MultiPleX
CK	Clock	OSC	OSCillator
CON	CONnector	RL	ReLay
DET	DETector	PLL	Phase Locked Loop
EIAJ	Electronic Industry Association of Japan	PSC	PreSCaler
		RAM	Random Access Memory
EQ	EQualizer	RCH	Right CHannel
EV	Electronic Volume	REG	REGulator
F	Filament	RF	Radio Frequency
FLD	FLuorescent Display	ROM	Read Only Memory
FM	Frequency Modulation	SEG	SEGment
G	Grid	SENS	SENSor (or SENSitivity)
GE	Graphic Equalizer	SM	Signal Meter
GND	GrouND	SSG	Standard Signal Generator
H	High (referring to voltage)	ST	STereo
IF	Intermediate Frequency	ST	STrobe
IHF	Institute of High Fidelity	STO	STOre
INH	INHibit	SW	SWitch
INT	INTerrupt	THD	Total Harmonic Distortion
L	Low (referring to voltage)	VCO	Voltage Controled Oscillator
LCD	Liquid Crystal Display	VR	Variable Resistor
L CH	Left CHannnel		

STEREO RECEIVER

MODEL AA-M33

THIS MANUAL IS APPLICABLE TO BOTH SILVER AND BLACK PANEL MODEL

SECTION 1 SERVICE MANUAL 3
SECTION 2 PARTS LIST 17

SAFETY INSTRUCTIONS

SAFETY CHECK AFTER SERVICING

Confirm the specified insulation resistance between power cord plug prongs and externally exposed parts of the set is greater than 10 Mohms, but for equipment with external antenna terminals (tuner, receiver, etc.) and is intended for [C] or [A], specified insulation resistance should be more than 2.2 Mohms (ground terminals, microphone jacks, headphone jacks. line-in-out jacks etc.)

PRECAUTIONS DURING SERVICING

1. Parts identified by the ⚠ symbol parts are critical for safety.
   Replace only with parts number specified.
2. In addition to safety, other parts and assemblies are specified for conformance with such regulations as those applying to spurious radiation. These must also be replaced only with specified replacements.
   Examples: RF converters, tuner units, antenna selector switches, RF cables, noise blocking capacitors, noise blocking filters, etc.
3. Use specified internal wiring. Note especially:
   1) Wires covered with PVC tubing
   2) Double insulated wires
   3) High voltage leads
4. Use specified insulating materials for hazardous live parts. Note especially:
   1) Insulation Tape
   2) PVC tubing
   3) Spacers (Insulating Barriers)
   4) Insulation sheets for transistors
   5) Plastic screws for fixing microswitch (especially in turntable)
5. When replacing AC primary side components (transformers, power cords, noise blocking capacitors, etc.), wrap ends of wires securely about the terminals before soldering.

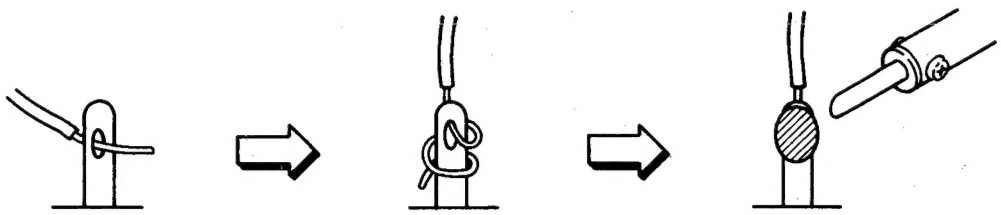

6. Observe that wires do not contact heat producing parts (heatsinks, oxide metal film resistors, fusible resistors, etc.).
7. Check that replaced wires do not contact sharp edged or pointed parts.
8. Also check areas surrounding repaired locations.
9. Use care that foreign objects (screws, solder droplets, etc.) do not remain inside the set.

VOLTAGE CONVERSION

Each machine is preset at the factory according to its destination, but some machines can be set to 110V, 120V, 220V or 240V as required.

If your machine's voltage can be converted:

Before connecting the power cord, turn the VOLTAGE SELECTOR located on the rear panel with a screwdriver until the correct voltage is indicated. Models for Japan, USA, Europe, UK and Australia are not equipped with this facility.

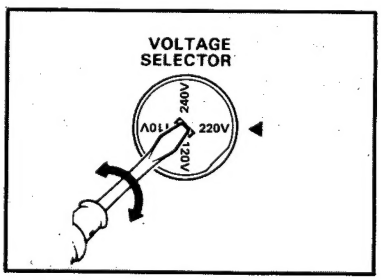

SECTION 1

SERVICE MANUAL

TABLE OF CONTENTS

I. SPECIFICATIONS 4
II. DISMANTLING OF UNIT 5
III. CONTROLS 6
IV. PRINCIPAL PARTS LOCATION 7
V. DESCRIPTION OF DIRECT FUNCTION 8
1. SPECIFICATIONS FOR INTER-COMPONENT SIGNALS IN DIRECT FUNCTION MODES 8
2. SPECIFICATION OF CONTROL IN/OUT SIGNALS IN VARIOUS MODES 9
VI. ADJUSTMENTS 10
1. MISCELLANEOUS PRECAUTIONARY ITEMS PRIOR TO ADJUSTMENT 10
2. TUNER ADJUSTMENT 11
VII. PC BOARD TITLES AND IDENTIFICATION NUMBERS 16

For basic adjustments, measuring methods, and operating principles, refer to GENERAL TECHNICAL MANUAL.

I . SPECIFICATIONS

FM TUNER SECTION

	Japan	Others
TUNING FREQUENCY RANGE	76 MHz to 90 MHz	87.5 MHz to 108 MHz
USABLE SENSITIVITY	15.2 dBf	16.2 dBf
QUIETING SENSITIVITY (S/N=50dB) Mono/ST	18.2dBf/40.2dBf	21.4dBf/43.7dBf
CAPTURE RATIO	1.5dB	1.5dB
SELECTIVITY (400kHz)	75dB	70dB
IMAGE REJECTION	45dB	45dB
IF REJECTION	90dB	90dB
SPURIOUS REJECTION	75dB	90dB
AM SUPPRESSION	50dB	60dB
SUB CARRIER SUPPRESSION		60dB
S/N (Mono/ST)	70dB/67dB	65dB/60dB
T.H.D. (Mono/ST)	0.1%/0.2%	0.14%
STEREO SEPARATION (1kHz)	45dB	45dB

AM TUNER SECTION

TUNING FREQUENCY RANGE	522 to 1,611kHz	520 to 1,610kHz (USA and Canada) 522 to 1,611kHz (Others)
USABLE SENSITIVITY (Bar)	300 μV/m	300 μV/m
SELECTIVITY	50dB	40dB
IMAGE REJECTION	42dB	50dB
IF REJECTION	50dB	55dB
S/N RATIO	45dB	40dB
T.H.D.	0.7%	1%
STATION MEMORY BACK-UP	20 Days	20 Days

POWER AMPLIFIER SECTION

RATED POWER OUTPUT (2 channels Driven)		8ohms,20 to20,000Hz:2x25W/0.05% 8ohms, 1kHz:2x38W/5%(EIAJ)	8 ohms 20 to 20,000Hz: 2x25W/0.05%
S/N (IHF-A)	PHONO	70dB	70dB
	AUX	80dB	80dB
RESIDUAL NOISE (8 ohms)		0.2mV	0.2mV
CHANNEL SEPARATION (IHF, 1kHz)		50dB	50dB
DAMPING FACTOR (1kHz, 8 ohms)		40	40
AMPLICABLE SPEAKER IMPEDANCE		8 to 16 ohms	8 to 16 ohms

PRE-AMPLIFIER SECTION

INPUT SENSITIVITY/IMPEDANCE	PHONO	1.25mV/47 kohms	1.25mV/47 kohms
	MIC	0.7mV/16 kohms	0.7mV/16 kohms
	TUNER	150mV/47 kohms	150mV/47 kohms
OUTPUT LEVEL	TAPE REC	150mV	150mV
FREQUENCY RESPONSE	PHONO (RIAA Deviation)	±0.5dB (20 to 20,000Hz)	±0.5dB (20 to 20,000Hz)
	TUNER, AUX, TAPE	10Hz to 80kHz +0, −3dB	10Hz to 80kHz +0, −3dB
TONE BOOST	BASS	5.2 dB(100Hz)	5.5dB (100Hz)
	TREBLE	6.2dB (10kHz)	6.0dB (10kHz)
POWER REQUIREMENTS		100V, 50/60Hz for Japan 120V, 60Hz for USA & Canada 220V, 50Hz for Europe except UK 240V, 50Hz for UK & Australia 110V/120V/220V/240V, 50/60Hz switchable for other countries	
POWER CONSUMPTION		JPN 60W, CSA 100W, ALL 65W	
DIMENSIONS		350(W) x 98(H) x 270(D) mm (13.8 x 3.9 x 10.6 inches)	
WEIGHT		5.3 kg (11.7 lbs)	

* For improvement purposes, specifications and design are subject to change without notice.

II. DISMANTRING OF UNIT

In case of trouble, etc. necessitating dismantling, please dismantle in the order shown in the photographs. Reassemble in reverse order.

3

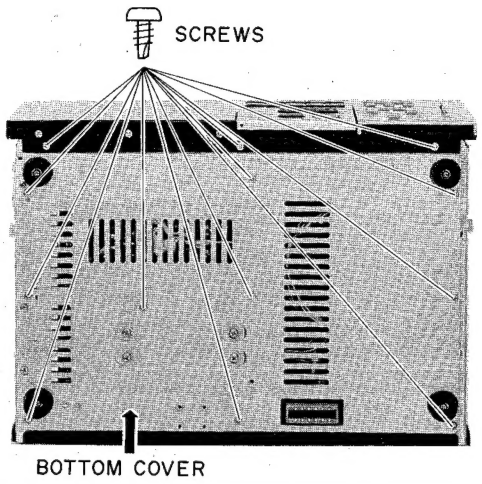

1

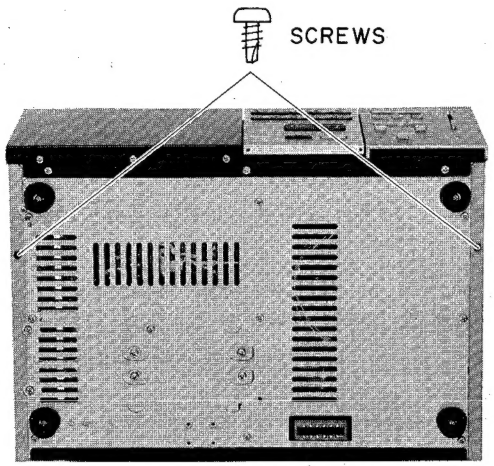

4

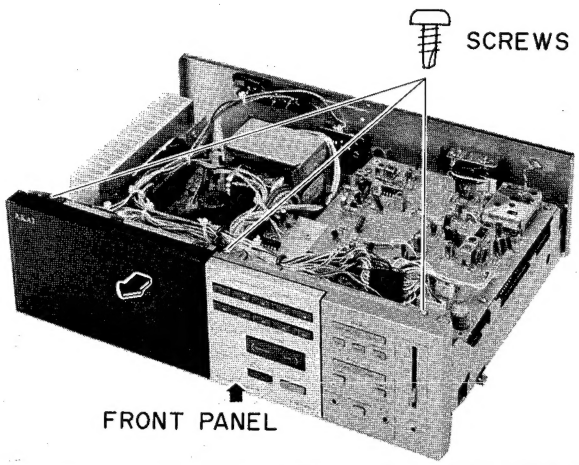

2

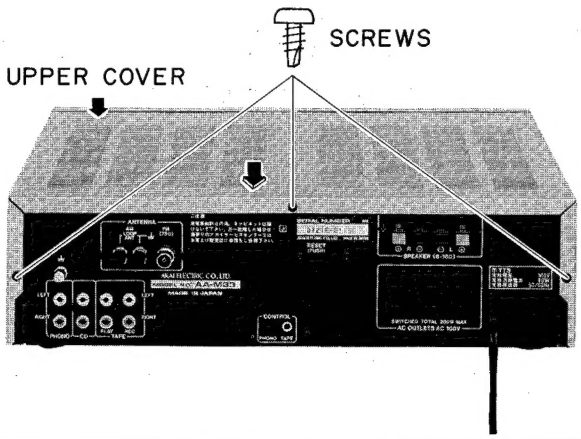

5

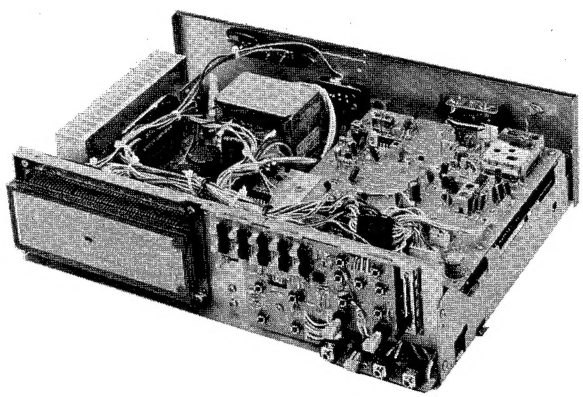

III. CONTROLS

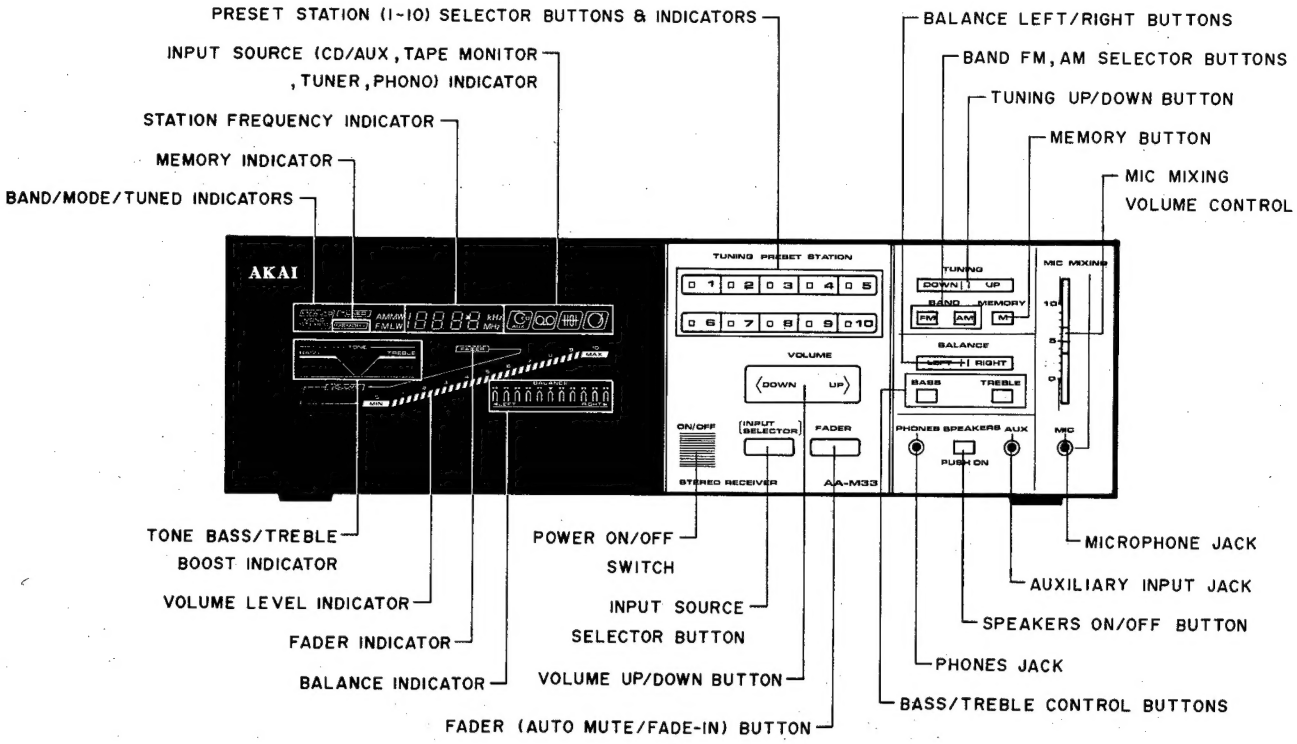

Fig. 3-1 Front View

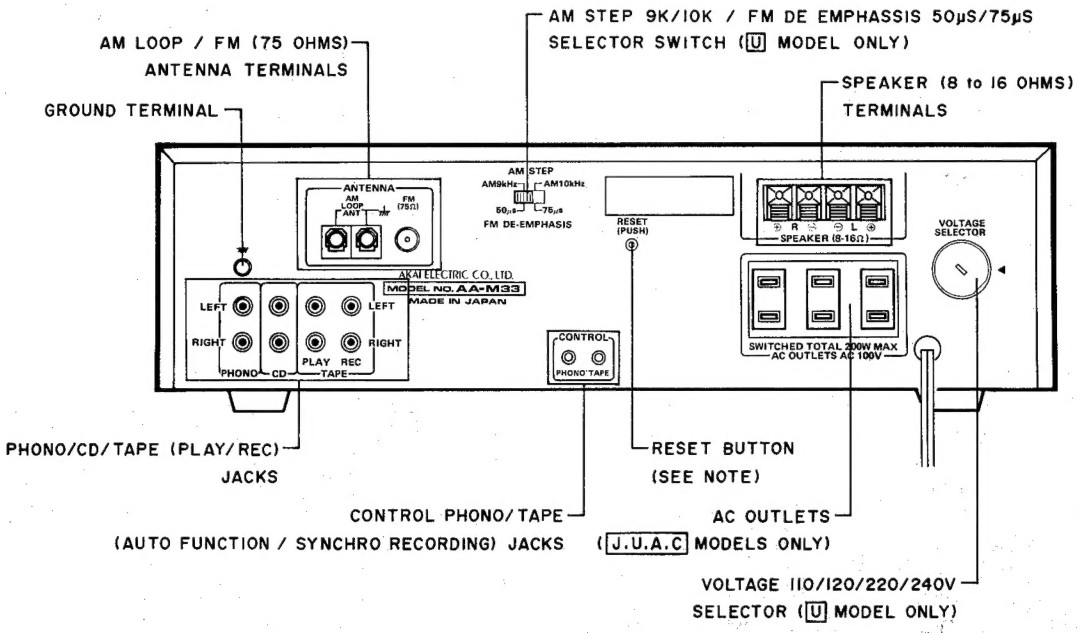

Fig. 3-2 Rear View

NOTE: RESET BUTTON

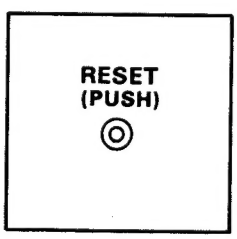

On the rear panel of the AA-M33 there is a RESET button which resets the amp sections micro-computer inside the receiver to a kind of initial "preset" mode when depressed. This button is for use when a problem related to insufficient memory back-up power occurs. This usually causes any of the functions related to the amplifier section to stop working.

- (You may use a screwdriver or ball point pen to depress the RESET button)

When the RESET button is depressed, the AA-M33 should now return to full operation.

IV. PRINCIPAL PARTS LOCATION

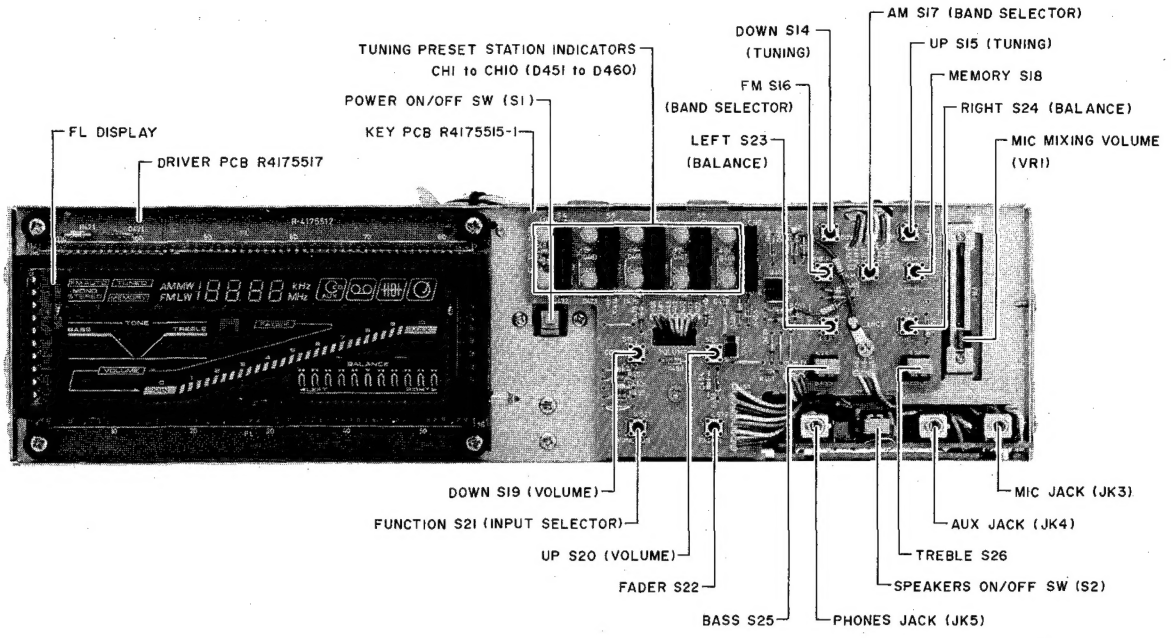

Fig. 4-1 Front View

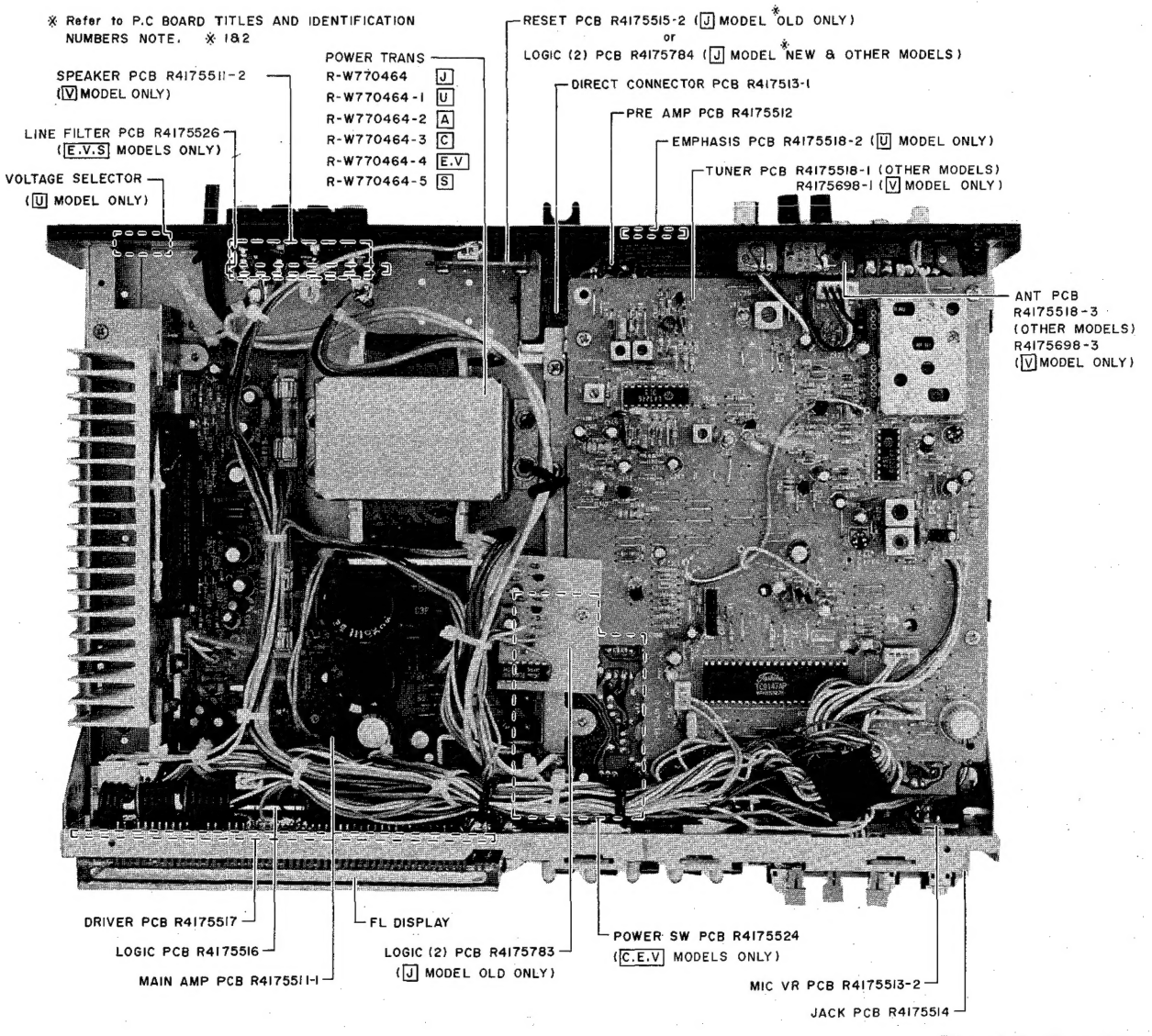

Fig. 4-2 Top View

V. DESCRIPTION OF DIRECT FUNCTION

5-1. SPECIFICATIONS FOR INTER-COMPONENT SIGNALS IN DIRECT FUNCTION MODES

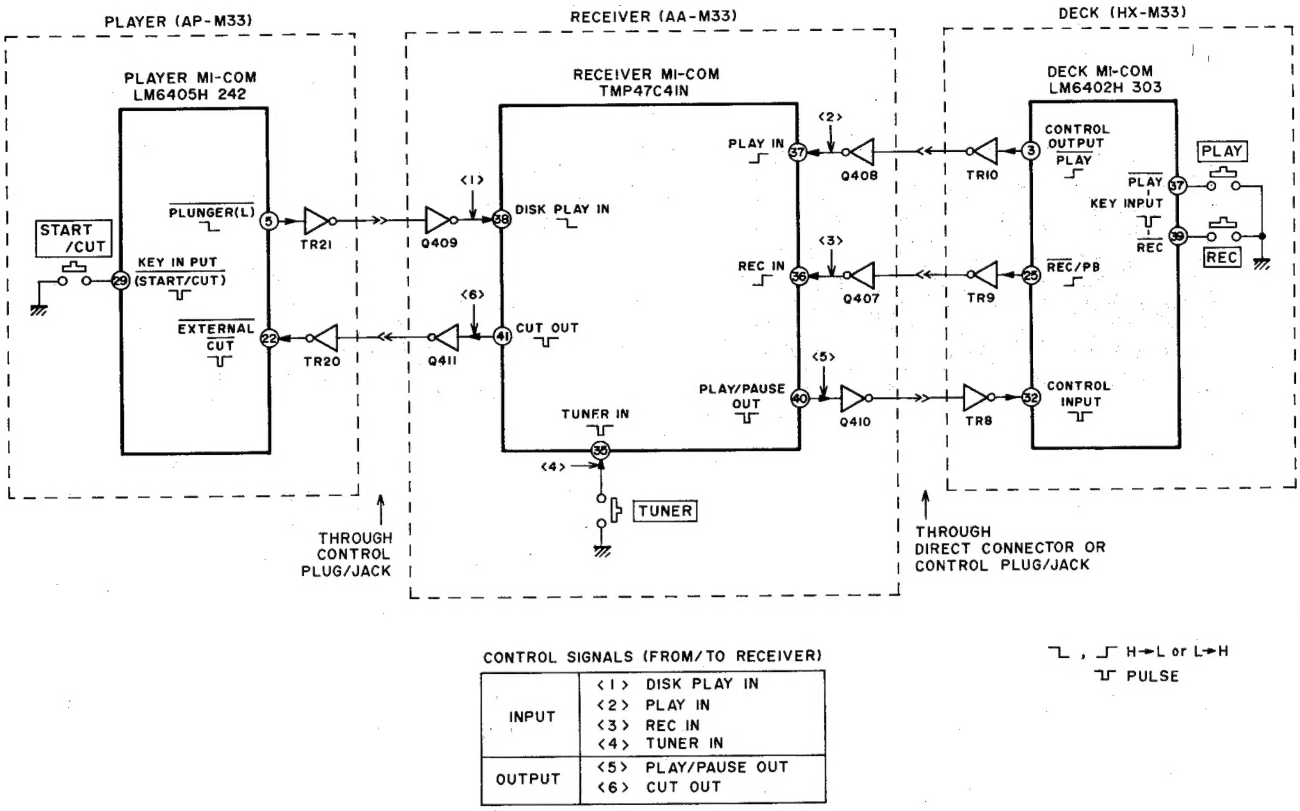

CONTROL SIGNALS (FROM/TO RECEIVER)

INPUT	<1> DISK PLAY IN <2> PLAY IN <3> REC IN <4> TUNER IN
OUTPUT	<5> PLAY/PAUSE OUT <6> CUT OUT

⌐ , ⌐ H→L or L→H
⌐ PULSE

Fig. 5-1 Signal Lines between Components for Direct Function

Signals among individual components are conveyed via the six signal lines that have been shown Fig. 5-1, each of which has been provided with a buffer for static electricity countermeasures.
Described below for each individual direct function mode is the status (flow) of a group of signals for that function.

1) Phono Play
As the manual key of a player (START/CUT) is pushed, the player will either cut the play off when in a play mode or start playing when in a rest mode. The signal line [1] status in this process will be at "L" when the arm has descended on the record surface, and at "H" as the arm ascends off the record surface.
Upon receiving the [1] signal, the receiver will not only switch the function selector to PHONO but also output a signal to [5] to have the deck stop at the same time.

2) Deck Play
As the manual PLAY key of a deck is pushed, a play mode of the deck will be engaged and the signal line [2] status made "L".
Upon receiving this signal, the receiver will not only switch the function selector to TAPE but also output a signal to [6] to have the player cut the play off at the same time.

3) Tuner Play
As the TUNER manual key (or a station number key) of the receiver is pushed, the function selector of the receiver will be switched to TUNER. At the same time, a signal will also be output to [4] or [5] to have either the deck stop or the player cut the play off.

4) Synchro Recording Function
When a REC/PAUSE mode of the deck has been engaged and the player is started, the receiver upon receiving the "L" status of signal line [1], will not only switch the function selector to PHONO but also output a signal to [5] at the same time to engage a REC/PLAY mode of the deck. As the player has finished playing and "H" is output to [1], a signal will be output to [5] to engage a REC/PAUSE mode of the deck.

5) Manual Player Recording
When with the receiver function selector at PHONO, the player is started after engaging a REC/PAUSE mode of the deck, the receiver will output no signal to [5] even upon receipt of an "L" signal of [1].
In other words, it is only in a REC/PAUSE mode (when [2] is at "H" and [3] at "L") that a signal will be output to [5].
Thereafter, against the "L" → "H" signals of [1], the receiver will output a signal to [5] and engage a REC/PAUSE mode of the deck.

6) Function Selection during Recording
When in the middle of a REC/PLAY mode of the deck, the receiver is switched to another function, no signal will be output to [5], similarly to 5) above, and the REC/PLAY mode sustained.
Accordingly, when the player is started in the middle of recording off the tuner, the function selector will be switched to PHONO at play start of the player, with the deck still in a REC/PLAY mode.
As the player finishes playing in this state, and [1] changes from "L" to "H" in status, a signal will be output to [5] to engage a REC/PAUSE mode of the deck.
When the function selector is switched to TUNER in the middle of recording off the player, the play will be cut off by the [6] signal, but the deck will remain in the REC/PLAY mode.

7) Recording of Tuner
When with the deck in a REC/PAUSE mode, the TUNER function is selected, no signal will be output to [5]. Accordingly, no synchro-recording of the tuner exists. To [4], however, a signal will be output and the player stopped.

8) Manual Function Key of Receiver
When functions have been switched with the manual function key (input selector key), no signal will be output to [5] or [6], and no synchro recording function performed.
In addition, when the deck is recording, no manual function keys of the deck will be acknowledged, for the prevention of oscillations.
When AUX has been selected with a manual function key, and the player START/CUT key is pushed in the middle of recording (REC/PLAY) by the deck, the receiver will be switched by the [1] signal to the PHONO function, but the deck will remain in the REC/PLAY mode.
Conversely, when AUX has been switched to in the middle of recording off a disc, the player mode will be sustained unaltered, and no signal output to [5] even under the [1] signal that varies from "L" → "H".

5-2. SPECIFICATION OF CONTROL IN/OUT SIGNALS IN VARIOUS MODES

1) PHONO PLAY

DISK PLAY IN	"H"↓"L"				"L"↑"H"			
PLAY IN	L	L	H	H	L	L	H	H
REC IN	L	H	L	H	L	H	L	H
PLAY/PAUSE OUT	—	⊔	⊔	⊔	⊔*	—	—	—
CUT OUT	—	—	—	—	—	—	—	—

* Only when function is in PHONO mode, otherwise no pulse

2) DECK PLAY

PLAY IN	"H"↓"L"				"L"↑"H"			
DISK PLAY IN	L	L	H	H	L	L	H	H
REC IN	L	H	L	H	L	H	L	H
PLAY/PAUSE OUT	—	—	—	—	—	—	—	—
CUT OUT	—	⊔	—	—	—	—	—	—

3) TUNER PLAY

TUNER IN	"L"↑"H"								"H"↓"L"
DISK PLAY IN	L	L	L	L	H	H	H	H	X
PLAY IN	L	L	H	H	L	L	H	H	X
REC IN	L	H	L	H	L	H	L	H	X
PLAY/PAUSE OUT	—	⊔	—	⊔	—	⊔	—	⊔	—
CUT OUT	⊔	⊔	⊔	⊔	—	⊔	—	—	—

NOTE: ↓ ..... Down edge
↑ ..... Up edge
⊔ ..... One shot pulse
— ..... No pulse
H ..... High (referring to voltage)
L ..... Low (referring to voltage)
X ..... No relation

VI. ADJUSTMENT

6-1. MISCELLANEOUS PRECAUTIONARY ITEMS PRIOR TO ADJUSTMENT

1) As shown in Fig. 6-1, model AM-M33 has ben designed, intended for the directly connected use stacked together with the EA-M77 (Graphic Equalizer) and HX-M33 (Cassette Deck), where all source signals will first be passed through direct connectors and the EA-M77 (or HX-M33 when no EA-M77 is used), before they are input to the tone control section and main amp section of the AA–M33 for sound output.

AA-M33 Stereo Receiver
HX-M33 Stereo Cassette Deck

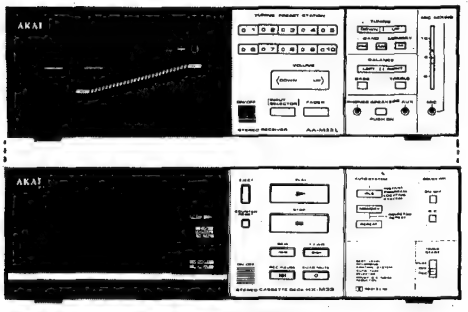

Récepteur stéréo AA-M33
Magnétocassette HX-M33

AA-M33 Stereo Receiver
EA-M77 Graphic Equalizer
HX-M33 Stereo Cassette Deck

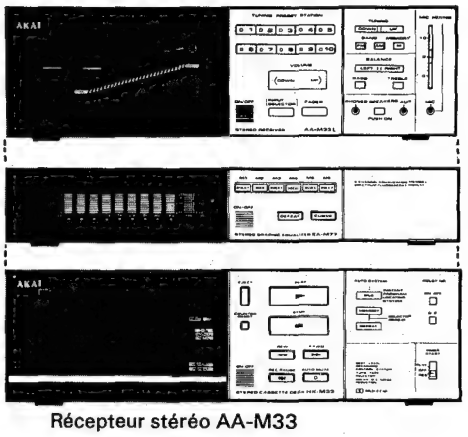

Récepteur stéréo AA-M33
Egaliseur graphique EA-M77
Magnétocassette HX-M33

Fig. 6-1

2) Accordingly, when the lone use of the AA-M33 is desired for repairs, readjustment, or equivalent, or when it is used, connected to a tape deck other than the HX-M33, connect a mini-plug (3.5mm diameter) such as shown in Fig. 6-2 to the control jack (Tape) provided on the rear panel, for the necessary repairs or readjustment.
When this mini-plug (with either an open or shorted end) is not connected on, no sound output will be made because of the above arrangement.

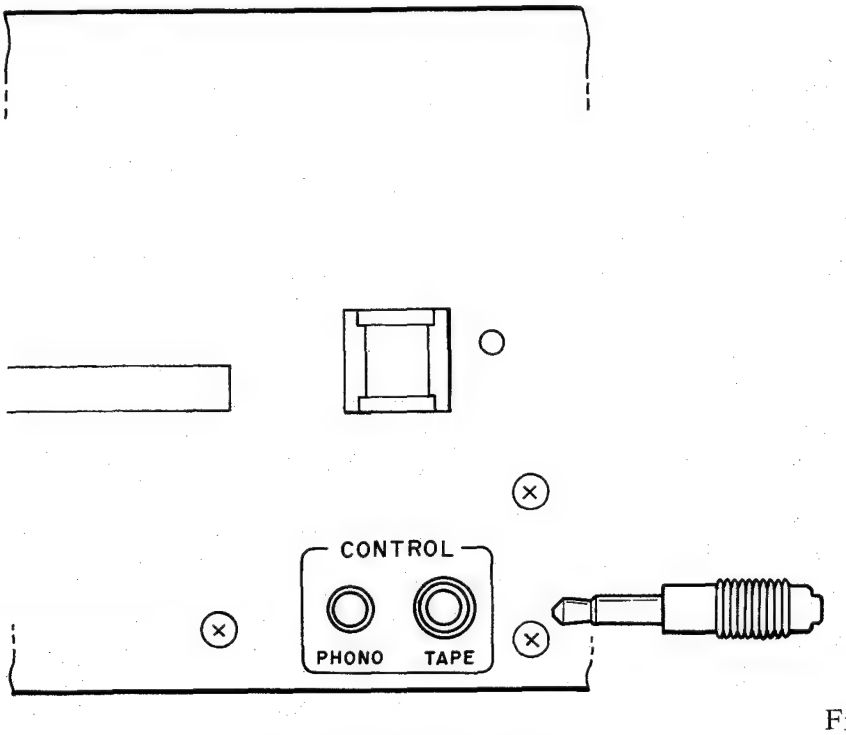

Fig. 6-2

6-2. TUNER ADJUSTMENT (Refer to Figs. 6-3 to 6-6)

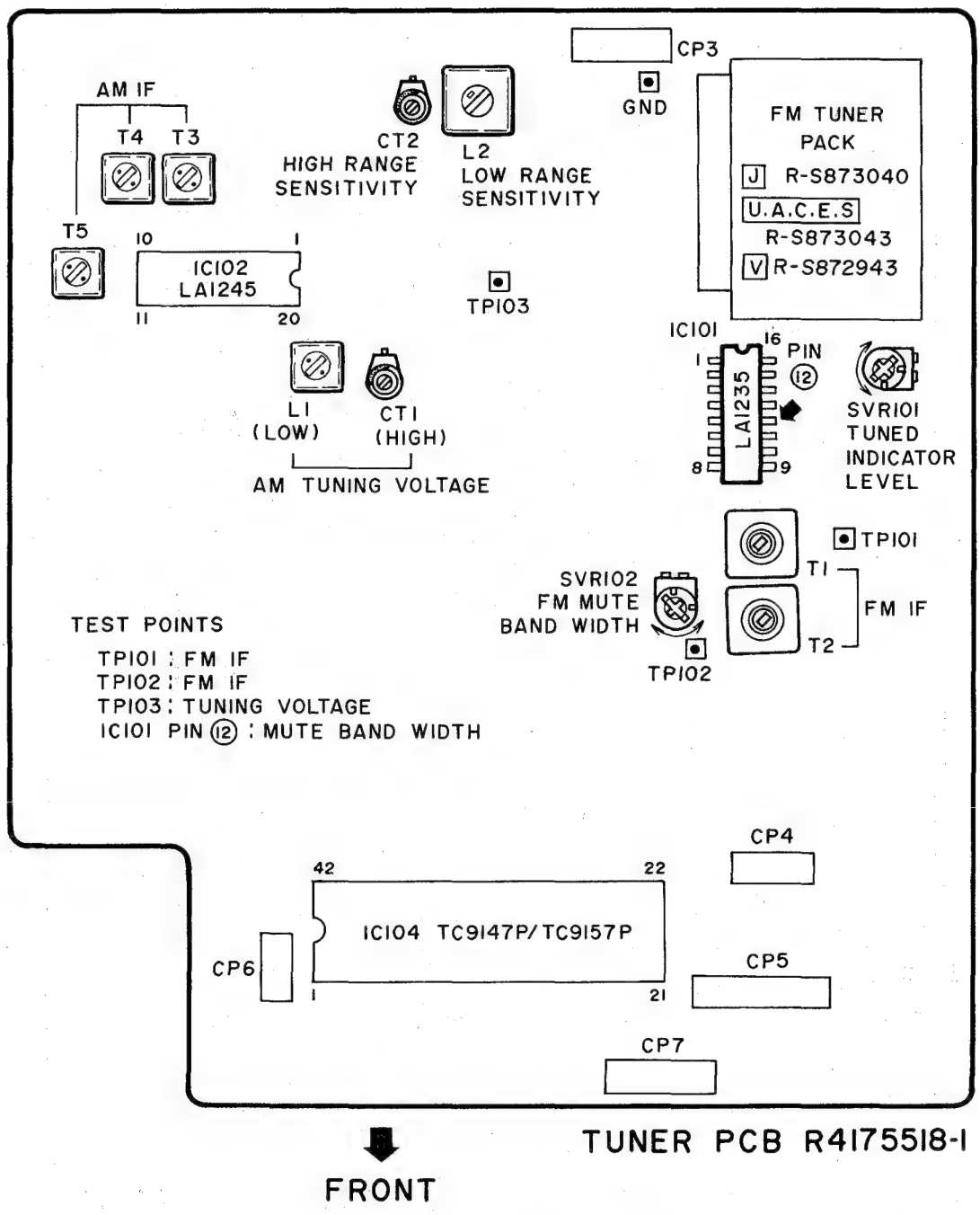

Fig. 6-3 Tuner PCB Adjustment Points

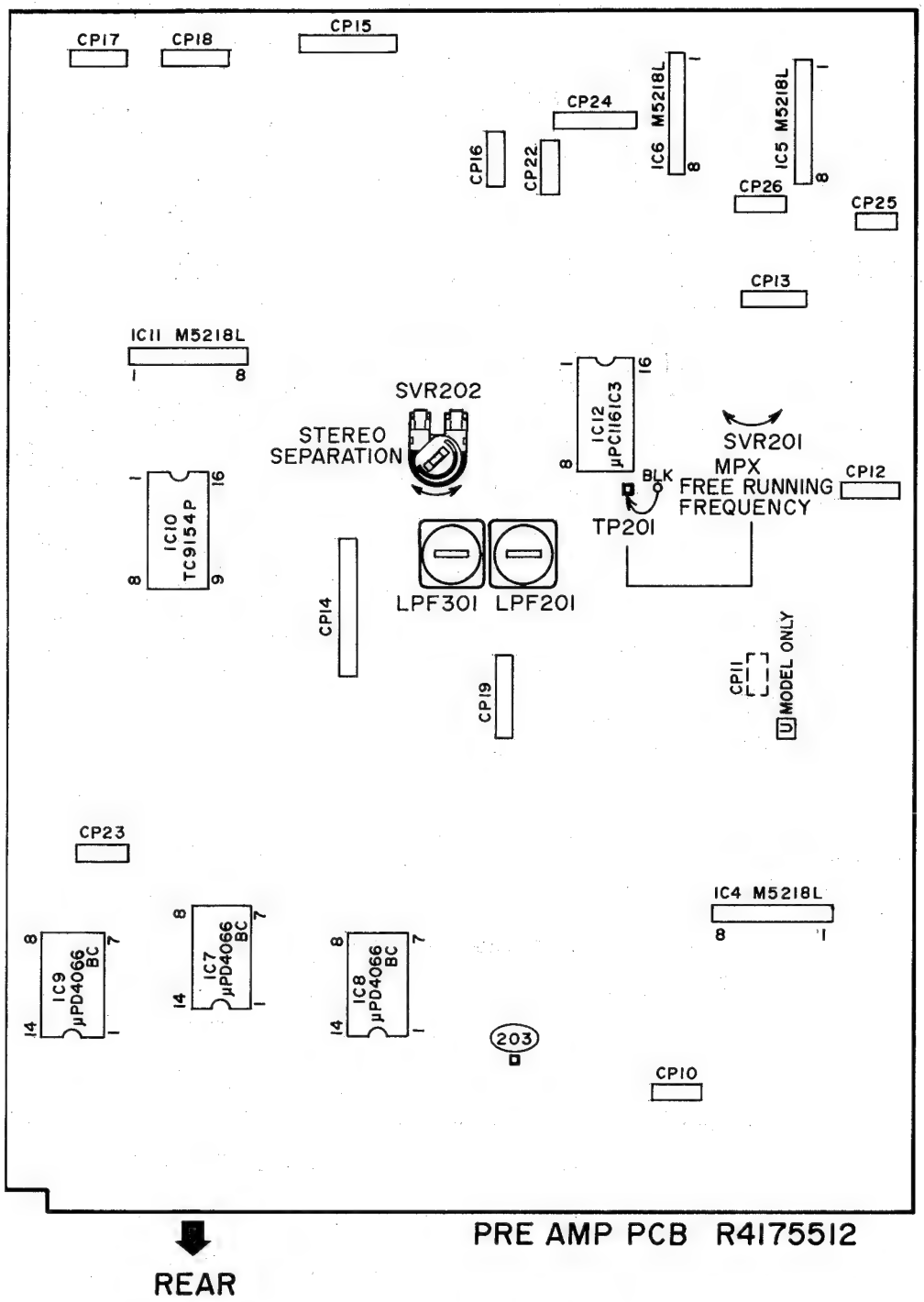

Fig. 6-4 Pre Amp PCB Adjustment Points

6-2-1. AM ADJUSTMENT (Refer to Figs. 6-3 and 6-5)

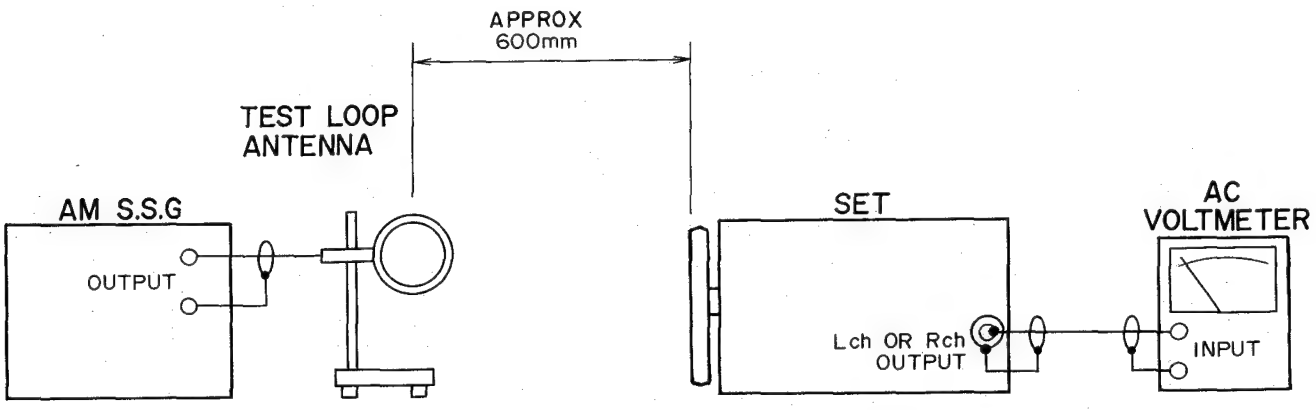

Fig. 6-5 AM Test Instruments Connection

Step	Adjustment Item	Input from SSG	Adjustment point	Result	Remarks
1	Tuning Voltage		L1	1.30±0.05V	1) BAND to AM. 2) Tuning Display to 522(520)kHz. 3) Connect a Digital Voltmeter (DC RANGE) between TP103 and GND.
			CT-1	7.90±0.1V	1) Tuning Display to 1611 (1610) kHz.
2	AM IF	450 kHz 120 dB	T3 T4 T5	Maximum Output	1) Tuning Display to 522(520)kHz. 2) Connect an AC Voltmeter to TAPE REC Terminal 3) Adjust T3, T4 and T5 Alternately.
3	Low Range Sensitivity	603(600)kHz 50 dB	L2	Maximum Output	1) Tuning Display to 603(600)kHz. 2) Connect an AC Voltmeter to TAPE REC Terminal.
4	High Range Sensitivity	1404(1400)kHz 50 dB	CT-2	Maximum Output	1) Tuning Display to 1404 (1400) kHz. 2) Connect an AC Voltmeter to TAPE REC Terminal.

NOTE: 1. The Frequencies indicated in ( ) are for USA and Canada Models.
2. The modulation rate of SSG is 30%.

6-2-2 FM ADJUSTMENT (Refer to Figs. 6-3, 4 and 6)

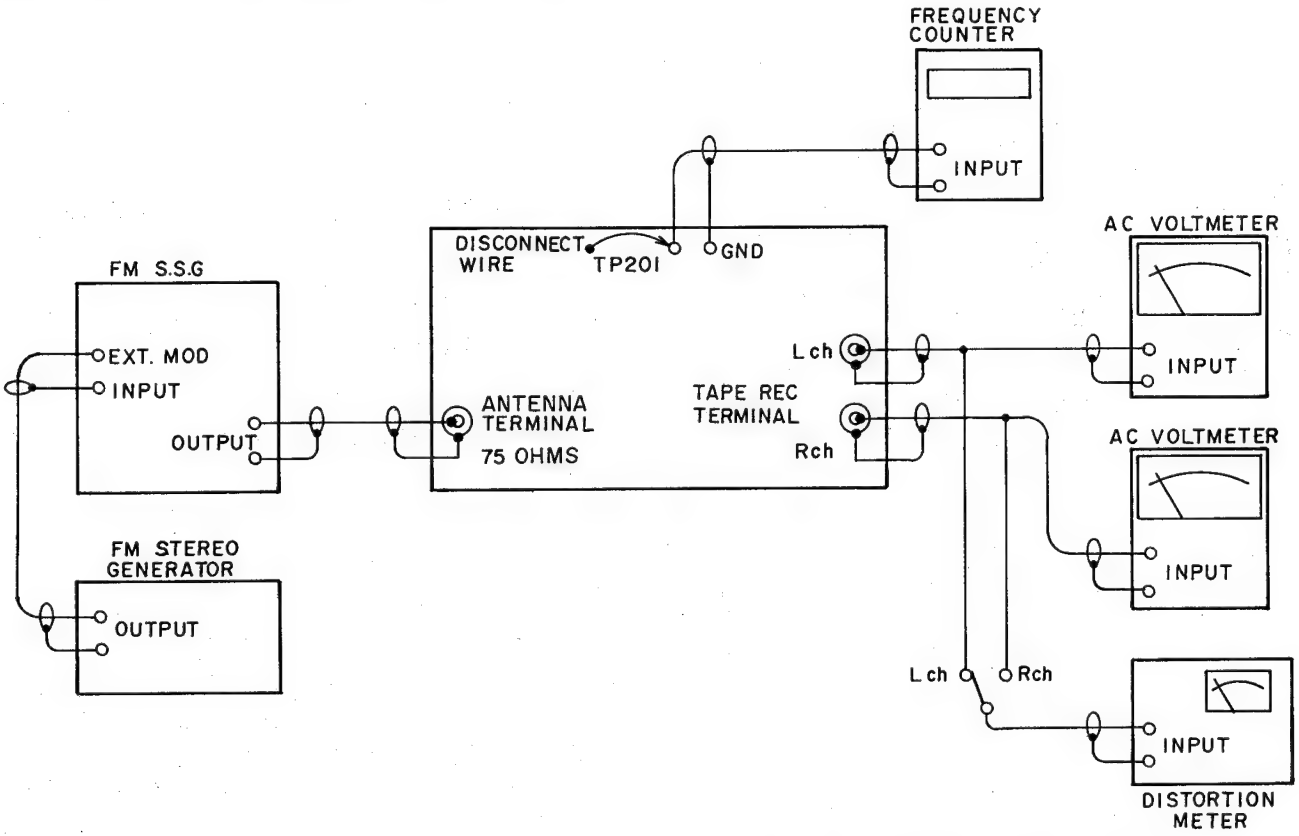

Fig. 6-6 FM Test Instruments Connection

Step	Adjustment Item	Input from SSG	Adjustment Point	Result	Remarks
1	FM IF	98.00(83.00)MHz 66 dB	T1	0±5 mV	1) BAND to FM. 2) Tuning Display to 98.00 (83.00)MHz. 3) Connect a Digital Voltmeter between TP101 and TP102 4) Connect a Distortion meter to TAPE REC Terminal. 5) For the best result adjust T1 and T2 alternately.
			T2	Minimum Distortion	
2	TUNED Indicator Level	98.00(83.00)MHz 18 dB	SVR101	"TUNED" indicator is lit	1) Tunning Display to 98.00 (83.00)MHz. 2) Adjust SVR101 to the point which the "TUNED" indicator is lit.
3	FM Mute Bandwidth	97.90(82.90)MHz~ 98.10(83.10)MHz 60 dB	SVR102	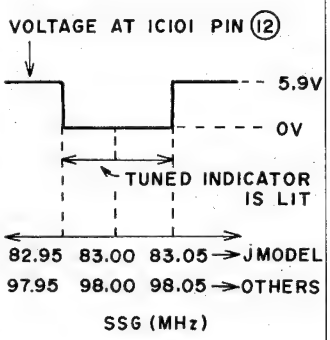	1) Tuning Display to 98.00 (83.00)MHz. 2) DC voltmeter to IC101 (LA1235) Pin ⑫. 3) Change the SSG frequency every 10kHz step between 97.90 (82.90)MHz and 98.10 (83.10)MHz, and adjust SVR102 so that the TUNED indicator is lit between 98.00 (83.00)±50 kHz.
4	MPX Free Running Frequency	98.00(83.00)MHz 66 dB MONO Modulation 0%	SVR201 (Pre-Amp P C Board)	19.0±0.05 kHz	1) Tuning Display to 98.00 (83.00)MHz. 2) Disconnect a wire from TP201 on Pre-Amp PCB. 3) Connect a frequency counter between TP201 and GND.
5	Stereo Separation	98.00(83.00)MHz 60 dB 1 kHz (Stereo 100%) Lch. [Rch.] Input	SVR202 (Pre-Amp PC Board)	Rch [Lch] output to Minimum	1) Tuning Display to 98.00 (83.00)MHz. 2) Connect an AC Voltmeter to TAPE REC Terminal

NOTE: 1. The Frequency Indicated in ( ) are for Japan models.
2. The modulation rate of SSG is 75%, except for Step 4.

VII. PC BOARD TITLE AND IDENTIFICATION NUMBERS

PC BOARD TITLE		PC BOARD NUMBER	REMARKS
TUNER	PC BOARD	R4175518-1	
TUNER	PC BOARD	R4175698-1	[V]
PRE AMP	PC BOARD	R4175512	
MAIN AMP	PC BOARD	R4175511-1	
SPEAKER	PC BOARD	R4175511-2	[V]
DRIVER	PC BOARD	R4175517	
LOGIC	PC BOARD	R4175516	
KEY	PC BOARD	R4175515-1	
LOGIC (2)	PC BOARD	R4175783	[J] (OLD) *1
RESET	PC BOARD	R4175515-2	
LOGIC (2)	PC BOARD	R4175784	EXCEPT [J] (OLD) *2
POWER SW	PC BOARD	R4175524	[C] [E] [V]
LINE FILTER	PC BOARD	R4175526	[E] [V] [S]
ANT	PC BOARD	R4175518-3	
JACK	PC BOARD	R4175514	
DIRECT CONNECTOR	PC BOARD	R4175513-1	
MIC VR	PC BOARD	R475513-2	
EMPHASIS	PC BOARD	R475518-2	[U]

*1 [J] MODEL (OLD) = [J] Models with;
Serial Number 81210-00801~13000
Serial Number 90110-00301~00800
Serial Number 90210-00101~00600

*2 [J] MODEL (NEW) = [J] Models with except the serial numbers indicated in *1.

SECTION 2

PARTS LIST

TABLE OF CONTENTS

RECOMMENDED SPARE PARTS LIST 19
1. TUNER PC BOARD BLOCK 20
2. DRIVER PC BOARD BLOCK 20
3. LOGIC PC BOARD BLOCK 21
4. LOGIC (2) PC BOARD BLOCK 21
5. KEY PC BOARD BLOCK 21
6. PRE AMP PC BOARD BLOCK 21
7. MAIN AMP PC BOARD BLOCK 21
8. JACK PC BOARD BLOCK 21
9. MIC VR PC BOARD BLOCK 21
10. SPEAKER PC BOARD BLOCK (V ONLY) 21
11. LINE FILTER PC BOARD BLOCK (E, V ONLY) 21
12. POWER SWITCH PC BOARD BLOCK (C, E, V ONLY) 21
13. ASSEMBLY BLOCK 22
14. FINAL ASSEMBLY BLOCK 22

Resistor and Capacitor which is not listed in this parts list, please refer to COMMON LIST FOR SERVICE PARTS.

1. TUNER PC BOARD BLOCK

REF. NO.	PARTS NO.	DESCRIPTION
1-1U	BA-712903	PC TUNER BLK AA-M33 (U)
1-1J	BA-713023	PC TUNER BLK AA-M33 (J)
1-1C	BA-713050	PC TUNER BLK AA-M33 (C,A) (C,A)
1-1E	BA-713038	PC TUNER BLK AA-M33 (E,S) (E,S)
1-1V	BA-713058	PC TUNER BLK AA-M33 (V) (V)
	TUNER PC BOARD	
1-IC101	EI-337417	IC LA1235
1-IC102	EI-202218	IC LA1245
1-IC103	EI-344438	IC TD6104P
1-IC104U	EI-711089	IC TC9157P (EXCEPT J)
1-IC104J	EI-344436	IC TC9147BP (J)
1-Q1	ET-711090	TR 2SC930E-SP
1-Q2	ET-403413	TR 2SC536NP H
1-Q3	ET-711094	TR FET 2SK161 Y
1-Q4	ET-403413	TR 2SC536NP H
1-Q5	ET-711090	TR 2SC930E-SP
1-Q6,7	ET-403413	TR 2SC536NP H
1-D1	ED-710974	D ZENER H GZA8.2 Y
1-D2	ED-327057	D SILICON H DS442X
1-D3,4	ED-711092	D VARACTOR SVC321-C2
1-D5	ED-710975	D ZENER H GZA4.7 Y
1-D6 to 9	ED-327057	D SILICON H DS442X
1-D11,12	ED-327057	D SILICON H DS442X
1-L1	EO-711081	COIL OSC
1-L2	EO-711080	COIL ANT
1-L3	EO-749965	COIL CHOKE
1-L4	EO-713060	COIL FILTER (V)
1-T1	EO-711073	COIL IFT
1-T2	EO-711074	COIL IFT
1-T3	EO-711082	COIL IFT
1-T4	EO-711083	COIL IFT
1-T5	EH-707231	FILTER
1-X1U	EH-712904	FILTER CE 10.7MHz (EXCEPT V)
1-X1V	EH-713059	FILTER CE 10.70MHz (V)
1-X2U	EH-712904	FILTER CE 10.7MHz (EXCEPT V)
1-X2V	EH-713059	FILTER CE 10.70MHz (V)
1-X3U	EH-712904	FILTER CE 10.7MHz (EXCEPT V)
1-X3V	EH-713059	FILTER CE 10.70MHz (V)
1-X4	EH-711084	FILTER CE
1-X5	EI-711077	OSC X'TAL
1-SVR101, 102	EV-711076	R S-FIX 223
1-CT1,2	EC-710973	C S-FIX 12.5PF
1-R101	ER-711125	R SD F10 1/2W 151K
1-R110	ER-324251	R OMF H FS 1W 101J
1-R119, 146	ER-336919	R OMF H SNP FS 1W 121J
1-R166	ER-742531	R MF MOR 1W 221J
1-CA3	EH-711130	COMP C 102×4
1-C78	EC-344157	C DOUBLE LAYER 473Z 5.5DC
1-C132	EC-314996	C STY V SNP CQFS 391J 50DC
1-2U	EE-711072	FM FRONT END PE312U18 (U,C,A,E,S)
1-2J	EE-710970	FM FRONT END PE312J13 (J)
1-2V	EE-713066	FM FRONT END (V)
1-3	EJ-344423	TERMINAL W/SCREW Y KD-31-0133 P 2P

NOTE: Only for V model, numbers 1XX are used for Transistors, Diodes, Transformers and Coils.

ex. Q1→Q101, T1→T101
D1→D101, L1→L101

2. DRIVER PC BOARD BLOCK

REF. NO.	PARTS NO.	DESCRIPTION
2-1U	BA-712906	PC DRIVER BLK AA-M33 (U) (U,J,C,A,E,S)
2-1V	BA-713061	PC DRIVER BLK AA-M33 (V) (V)
	DRIVER PC BOARD	
2-IC402	EI-343417	IC LB1294
2-IC403	EI-344437	IC TD6301AP
2-Q420	ET-711116	TR DTA124F
2-Q421, 422	ET-322244	TR 2SA608K-NP F,G
2-Q423 to 425	ET-711116	TR DTA124F
2-Q426 to 428	ET-711091	TR DTC124F
2-Q429	ET-322244	TR 2SA608K-NP F,G
2-Q430, 431	ET-403413	TR 2SC536NP H
2-Q432	ET-711116	TR DTA124F
2-Q433	ET-711091	TR DTC124F
2-Q434	ET-711116	TR DTA124F
2-Q435	ET-403413	TR 2SC536NP H
2-D421 to 423	ED-712910	D ZENER H GZA3.0 Y
2-D425	ED-712909	D ZENER H GZA20 Y
2-D427 to 431	ED-327057	D SILICON H DS442X
2-D432	ED-710979	D ZENER H GZA5.1 Y
2-D433	ED-710888	D ZENER H GZA3.6 Y
2-D434	ED-712911	D ZENER H GZA2.0 X
2-RA420	EH-712999	COMP R 1/8W 104×12
2-RA421	EH-713000	COMP R 1/8W 223×7
2-RA422	EH-711117	COMP R 1/8W 223×8
2-RA423	EH-713000	COMP R 1/8W 223×7
2-RA424	EH-711120	COMP R 1/8W 104×5
2-FLD	EM-712907	IND FL

ASSEMBLY BLOCK

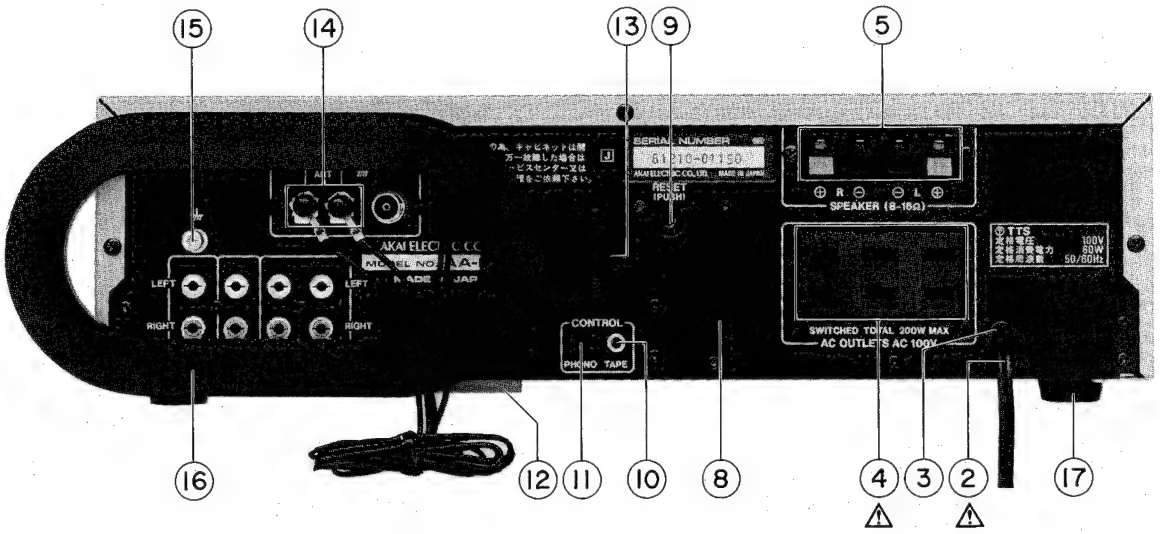

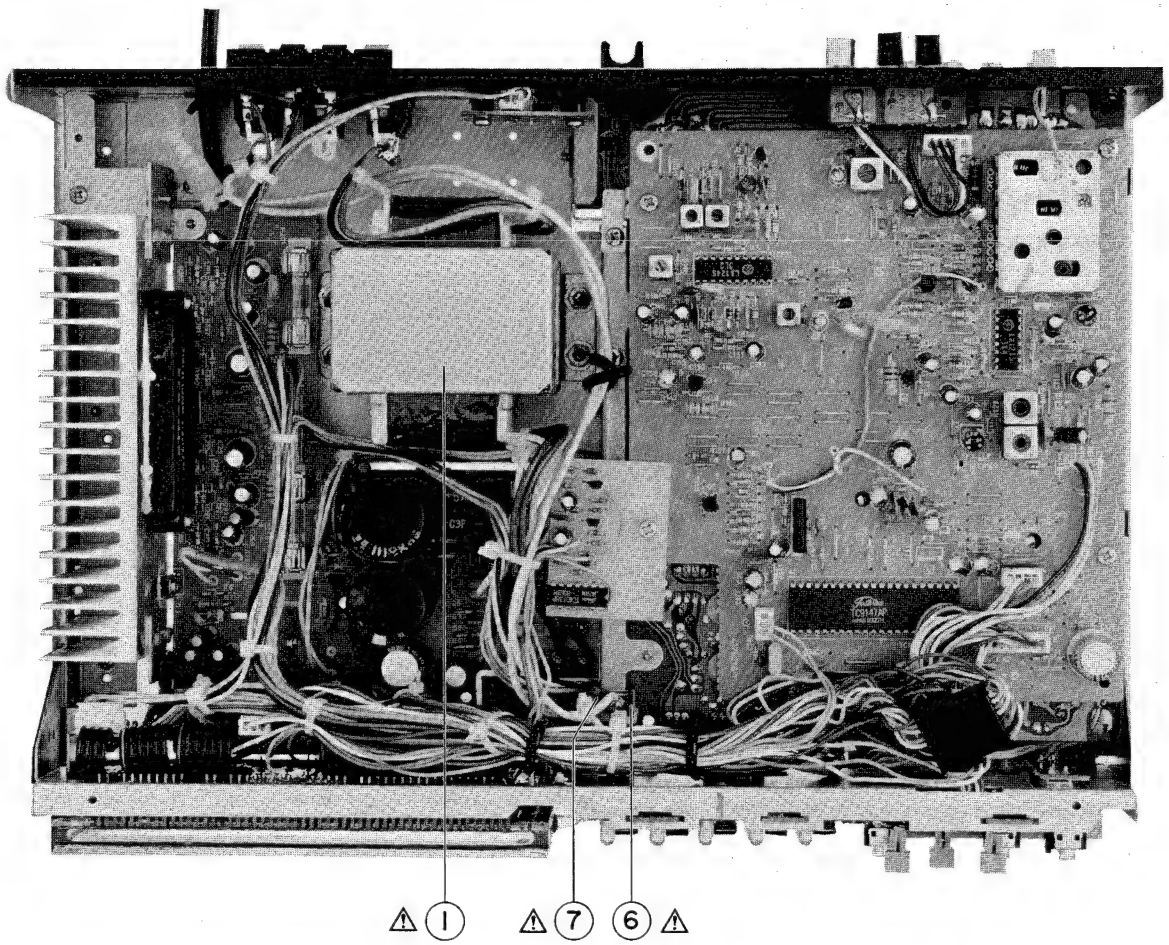

13. ASSEMBLY BLOCK

REF. NO.	PARTS NO.	DESCRIPTION
13-1U	BT-712900	⚠ TRANS POWER AA-M33 (U)
13-1J	BT-713022	⚠ TRANS POWER AA-M33 (J)
13-1C	BT-713049	⚠ TRANS POWER AA-M33 (C)
13-1A	BT-713054	⚠ TRANS POWER AA-M33 (A)
13-1E	BT-713037	⚠ TRANS POWER AA-M33 (E,V)
13-1S	BT-713043	⚠ TRANS POWER AA-M33 (S)
13-2U	EW-306428	⚠ AC CORD 2 CORES KP-700A, VFF U/T (U)
13-2J	EW-306427	⚠ AC CORD 2 CORES KP-211, VFF J (J)
13-2C	EW-343363	⚠ AC CORD 2 CORES KP-8, SPT-2 105C UC (C,A)
13-2E	EW-313882	⚠ AC CORD 2 CORES KP-419C, LTCE-2F E (E,V)
13-2S	EW-201515	⚠ AC CORD 2 CORES KP-560, LTSA-2F S (S)
13-3U	EZ-706210	STRAIN RELIEF 2P-4 (U,J)
13-3C	EZ-631945	STRAIN RELIEF SR-4N-4 (C,A,E,V,S)
13-4	EJ-712902	⚠ SOKET OUTLET 3 THROW (U,J,C,A)
13-5U	EJ-711054	TERMINAL PUSH 4P (EXCEPT V)
13-5V	EJ-713065	TERMINAL PUSH (V)
13-6	ES-711056	⚠ SW PUSH (S1)
13-7U	EC-338411	⚠ C CE V FZ 103P 400AC (C1) (U,C,A,E,V,S)
13-7J	EC-320548	⚠ C CE V F 103Z 250AC (C1) (J)
13-8U	SP-712899	PANEL REAR AA-M33 (U)
13-8J	SP-713021	PANEL REAR AA-M33 (J)
13-8C	SP-713048	PANEL REAR AA-M33 (C)
13-8A	SP-713053	PANEL REAR AA-M33 (A)
13-8E	SP-713036	PANEL REAR AA-M33 (E)
13-8V	SP-713055	PANEL REAR AA-M33 (V)
13-8S	SP-713042	PANEL REAR AA-M33 (S)
13-9	ES-712944	SW PUSH
13-10	EJ-712936	JACK
13-11	EJ-712935	JACK
13-12	EJ-350918	PLUG CONNECTER M1690 12P
13-13	SZ-711052	HOLDER ANTENNA
13-14	EJ-344423	TERMINAL W/SCREW YKD31-0133 P 2P
13-15	ZS-711051	EARTH SCREW
13-16	EE-712884	ANT LOOP (L1)
13-17	SA-711043	RUBBER FOOT
13-18x	ES-712905	SW SLIDE (S28) (U)

14. FINAL ASSEMBLY BLOCK

REF. NO.	PARTS NO.	DESCRIPTION
14-1	BD-712885	PANEL FRONT AA-M33
14-2	SP-349840	PANEL CENTER AA-M33
14-3	SZ-349843	SIGN WINDOW FLD
14-4	SE-349842	FILTER
14-5	SK-349838	RUBBER BUTTON SHEET (A)
14-6	SK-349839	RUBBER BUTTON SHEET (B)
14-7	SK-712886	KNOB
14-8	SK-350881	KNOB SLIDE (B)
14-9	SK-712887	KNOB PROGRAM 1
14-10	SK-712889	KNOB PROGRAM 2
14-11	SK-712891	KNOB PROGRAM 3
14-12	SK-712892	KNOB PROGRAM 4
14-13	SK-712893	KNOB PROGRAM 5
14-14	SK-712894	KNOB PROGRAM 6
14-15	SK-712895	KNOB PROGRAM 7
14-16	SK-712896	KNOB PROGRAM 8
14-17	SK-712897	KNOB PROGRAM 9
14-18	SK-712898	KNOB PROGRAM 10
14-19	SP-713001	COVER UPPER
14-20	SZ-713186	BRACKET A
14-21	SZ-713187	BTACKET B
14-22	SZ-713188	BRACKET PANEL
14-23	ML-713189	LEVER POWER SW
14-24	MZ-350879	PLATE SLIDE
14-25	SK-350880	HOLDER KNOB
14-26	ZS432843	PAN26 x 04 STL CMT
14-27	ZS-608321	B PAN30 x 06 STL CMT PW080
14-28	ZS-200676	T2CTS 30 x 06 STL CMT
14-29	ZS-332008	PT PAN 30 x 06 STL CMT

FINAL ASSEMBLY BLOCK

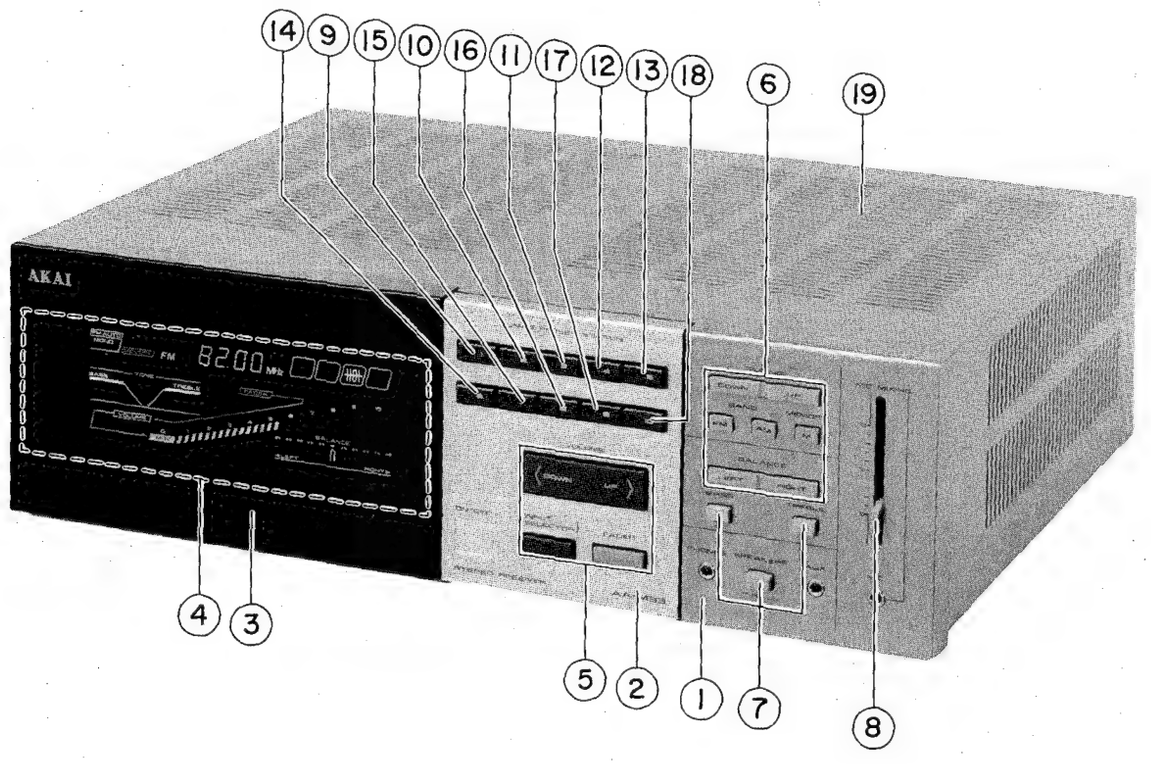

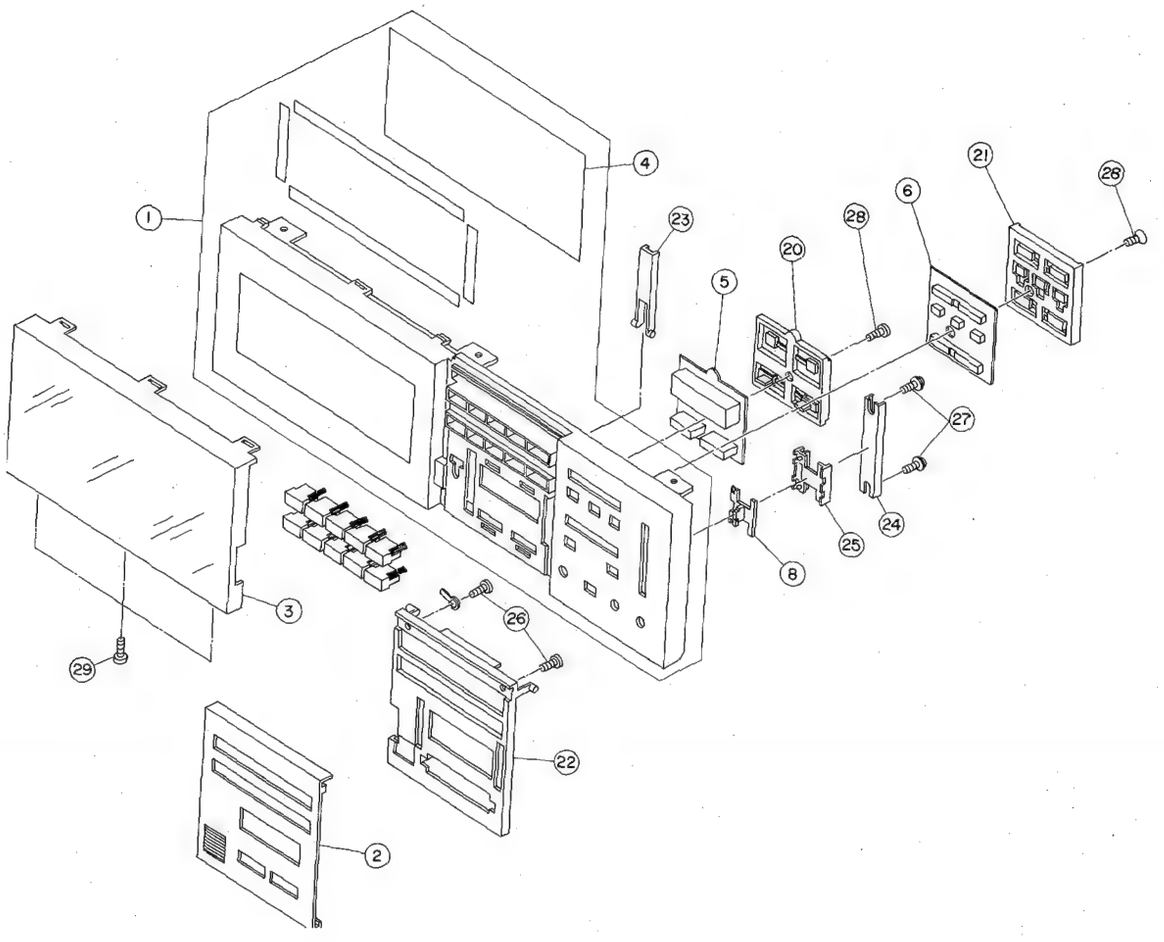

INDEX

PARTS NO.	REF. NO.	PARTS NO.	REF. NO.	PARTS NO.	REF. NO.	PARTS NO.	REF. NO.	PARTS NO.	REF. NO.
BA-712903	1-1U	ED-327057	6-D26	EH-711130	1-CA3	ER-711183	7-R7	ET-403413	6-Q203
BA-712906	2-1U	ED-327057	6-D27	EH-711130	3-CA402	ER-712929	6-R46	ET-403413	6-Q205
BA-712913	3-1U	ED-327057	6-D28	EH-712904	1-X1U	ER-712929	6-E47	ET-403413	6-Q302
BA-712919	5-1U	ED-327057	6-D29	EH-712904	1-X2U	ER-712941	7-R10	ET-403413	6-Q303
BA-712921	6-1U	ED-336805	3-D402	EH-712904	1-X3U	ER-712942	7-R11U	ET-403413	6-Q305
BA-712937	7-1U	ED-336805	3-D401	EH-712915	3-X401	ER-712943	7-R2	ET-711090	1-Q1
BA-713023	1-1J	ED-336805	3-D406	EH-712916	3-RA403	ER-712943	7-R5	ET-711090	1-Q5
BA-713025	6-1J	ED-336805	7-D2	EH-712917	3-RA402	ER-713041	7-R11E	ET-711091	2-Q426
BA-713026	7-1J	ED-336805	7-D3	EH-712918	3-RA401	ER-742531	1-R166	ET-711091	2-Q427
BA-713038	1-1E	ED-336805	7-D4	EH-712999	2-RA420	ES-336780	5-S4	ET-711091	2-Q428
BA-713039	6-1E	ED-336805	7-D5	EH-713000	2-RA421	ES-336780	5-S5	ET-711091	2-Q433
BA-713040	7-1E	ED-344280	5-D461	EH-713000	2-RA423	ES-336780	5-S6	ET-711091	3-Q407
BA-713047	7-1S	ED-344280	5-D462	EH-713059	1-X1V	ES-336780	5-S7	ET-711091	3-Q408
BA-713050	1-1C	ED-344280	5-D463	EH-713059	1-X2V	ES-336780	5-S8	ET-711091	3-Q409
BA-713051	6-1C	ED-344280	5-D464	EH-713059	1-X3V	ES-336780	5-S9	ET-711091	6-Q13
BA-713058	1-1V	ED-344280	5-D466	EI-202218	1-IC102	ES-336780	5-S10	ET-711091	6-Q15
BA-713061	2-1V	ED-344280	5-D465	EI-306727	4-IC701	ES-336780	5-S11	ET-711094	1-Q3
BA-713062	3-1V	ED-344280	5-D467	EI-317653	6-IC7	ES-336780	5-S12	ET-711116	2-Q420
BA-713063	5-1V	ED-344280	5-D468	EI-317653	6-IC8	ES-336780	5-S13	ET-711116	2-Q423
BA-713064	6-1V	ED-344280	5-D469	EI-317653	6-IC9	ES-336780	5-S14	ET-711116	2-Q424
BD-712885	14-1	ED-344280	5-D470	EI-337228	6-IC4	ES-336780	5-S15	ET-711116	2-Q425
BT-712900	13-1U	ED-344280	5-D471	EI-337228	6-IC6	ES-336780	5-S16	ET-711116	2-Q432
BT-713022	13-1J	ED-344280	5-D473	EI-337228	6-IC5	ES-336780	5-S17	ET-711116	2-Q434
BT-713037	13-1E	ED-344280	5-D474	EI-337228	6-IC11	ES-366780	5-S18	ET-711116	3-Q412
BT-713043	13-1S	ED-344280	5-D475	EI-337417	1-IC101	ES-336780	5-S19	ET-711116	3-Q413
BT-713049	13-1C	ED-344280	5-D477	EI-343371	6-IC10	ES-336780	5-S20	ET-711147	6-Q201
BT-713054	13-1A	ED-344280	2-D479	EI-343417	2-IC402	ES-336780	5-S21	ET-711147	6-Q206
EC-314996	1-C132	ED-344280	5-D472	EI-344436	1-IC104J	ES-336780	5-S22	ET-711147	6-Q301
EC-320548	13-7J	ED-344444	5-D451	EI-344437	2-IC403	ES-336780	5-S23	ET-711147	6-Q306
EC-330309	6-C247	ED-344444	5-D452	EI-344438	1-IC103	ES-336780	5-S24	EV-710985	6-SVR202
EC-338411	12-C1	ED-344444	5-D453	EI-346122	7-IC3	ES-711056	12-S1	EV-711076	1-SVR101
EC-338411	13-7U	ED-344444	5-D454	EI-711077	1-X5	ES-711056	13-6	EV-711076	1-SVR102
EC-344157	1-C78	ED-344444	5-D455	EI-711089	1-IC104U	ES-712905	13-18x	EV-712925	6-SVR201
EC-344157	3-C404	ED-344444	5-D457	EI-711152	6-IC12	ES-712932	8-S3	EV-712933	9-VR1
EC-710973	1-CT1	ED-344444	5-D458	EI-711179	7-IC1	ES-712944	4-S30	EW-201515	13-2S
EC-710973	1-CT2	ED-344444	5-D459	EI-712567	7-IC2U	ES-712944	13-9	EW-306427	13-2J
EC-711170	7-C4	ED-344444	5-D460	EI-712914	3-IC401	ES-713003	5-S25	EW-306428	13-2U
EC-711170	7-C5	ED-344444	5-D456	EI-713102	7-IC2E	ES-713003	5-S26	EW-313882	13-2E
ED-327057	1-D2	ED-710888	2-D433	EI-344423	1-3	ET-293220	7-Q2	EW-343363	13-2C
ED-327057	1-D6	ED-710974	1-D1	EJ-344423	13-14	ET-293253	7-Q1	EZ-631945	13-3C
ED-327057	1-D7	ED-710975	1-D5	EJ-350918	13-12	ET-322244	2-Q421	EZ-706210	13-3U
ED-327057	1-D8	ED-710979	1-D432	EJ-711054	13-5U	ET-322244	2-Q422	ML-713189	14-23
ED-327057	1-D9	ED-710986	6-D35	EJ-712902	13-4	ET-322244	2-Q429	MZ-350879	14-24
ED-327057	1-D11	ED-710986	6-D34	EJ-712922	6-2	ET-322244	4-Q701	SA-711043	13-17
ED-327057	1-D12	ED-710988	6-D33	EJ-712930	8-JK3	ET-322244	4-Q702	SE-349842	14-4
ED-327057	2-D427	ED-710988	6-D30	EJ-712931	8-JK4	ET-322244	6-Q14	SK-349838	14-5
ED-327057	2-D428	ED-710988	6-D31	EJ-712931	8-JK5	ET-322244	6-Q16	SK-349839	14-6
ED-327057	2-D429	ED-711092	1-D3	EJ-712935	13-11	ET-322244	6-Q17	SK-350880	14-25
ED-327057	2-D430	ED-711092	1-D4	EJ-712936	13-10	ET-322244	6-Q21	SK-350881	14-8
ED-327057	2-D431	ED-711161	7-D1	EJ-713065	10-1	ET-327714	7-Q3	SK-712886	14-7
ED-327057	3-D403	ED-712909	2-D425	EJ-713065	13-5V	ET-328435	3-Q401	SK-712887	14-9
ED-327057	3-D405	ED-712909	7-D6	EM-712907	2-FLD	ET-328435	3-Q402	SK-712889	14-10
ED-327057	4-D701	ED-712909	7-D7	EO-711073	1-T1	ET-328435	3-Q403	SK-712891	14-11
ED-327057	4-D702	ED-712910	2-D421	EO-711074	1-T2	ET-328435	3-Q404	SK-712892	14-12
ED-327057	4-D703	ED-712910	2-D422	EO-711080	1-L2	ET-328435	2-Q405	SK-712893	14-13
ED-327057	5-D476	ED-712910	2-D423	EO-711081	1-L1	ET-328435	3-Q406	SK-712894	14-14
ED-327057	5-D478	ED-712911	2-D434	EO-711082	1-T3	ET-328435	5-Q451	SK-712895	14-15
ED-327057	5-D480	ED-712926	6-D32	EO-711083	1-T4	ET-328435	5-Q452	SK-712896	14-16
ED-327057	5-D481	ED-712927	6-D22	EO-711184	11-L1	ET-328435	5-Q453	SK-712897	14-17
ED-327057	5-D482	ED-712927	6-D23	EO-711184	11-L2	ET-403413	1-Q6	SK-712898	14-18
ED-327057	5-D483	ED-712938	7-D8	EO-712924	6-LPF201	ET-403413	1-Q7	SP-349840	14-2
ED-327057	5-D484	ED-712939	7-D9	EO-712924	6-LPF301	ET-403413	1-Q2	SP-712899	13-8U
ED-327057	5-D485	EE-710970	1-2J	EO-713060	1-L4	ET-403413	1-Q4	SP-713001	14-19
ED-327057	5-D486	EE-711072	1-2U	EO-749965	1-L3	ET-403413	2-Q430	SP-713021	12-8J
ED-327057	6-D36	EE-712884	13-16	ER-324251	1-R110	ET-403413	2-Q431	SP-713036	13-8E
ED-327057	6-D37	EE-713066	1-2V	ER-325843	8-R285	ET-403413	2-Q435	SP-713042	12-8S
ED-327057	6-D38	EF-424811	7-F201J	ER-325843	8-R385	ET-403413	3-Q410	SP-713048	13-8C
ED-327057	6-D201	EF-424811	7-F301J	ER-336771	7-R8	ET-403413	3-Q411	SP-713053	12-8A
ED-327057	6-D202	EF-424811	12-F1C	ER-336771	7-R9	ET-403413	6-Q5	SP-713055	12-8V
ED-327057	6-D301	EF-593706	7-F4	ER-336919	1-R119	ET-403413	6-Q6	SZ-349843	14-3
ED-327057	6-D302	EF-593706	7-F5	ER-336919	1-R146	ET-403413	6-Q7	SZ711052	13-13
ED-327057	6-D15	EF-623103	12-F1E	ER-336919	6-R50	ET-403413	6-Q8	SZ-713186	14-20
ED-327057	6-D16	EF-623125	7-F201U	ER-341632	7-R12	ET-403413	6-Q9	SZ-713187	14-21
ED-327057	6-D17	EF-623125	7-F301U	ER-710995	7-R295U	ET-403413	6-Q10	SZ-713188	14-22
ED-327057	6-D18	EF-691007	7-F2	ER-710995	7-R395U	ET-403413	6-Q11	ZS-200676	14-28
ED-327057	6-D19	EF-691007	7-F3	ER-711125	1-R101	ET-403413	6-Q12	ZS-332008	14-29
ED-327057	6-D20	EH-707231	1-T5	ER-711169	7-R295E	ET-403413	6-Q18	ZS-432843	14-26
ED-327057	6-D21	EH-711084	1-X4	ER-711169	7-R395E	ET-403413	6-Q19	ZS-608321	14-27
ED-327057	6-D24	EH-711117	2-RA422	ER-711169	10-R297	ET-403413	6-Q20	ZS-711051	13-15
ED-327057	6-D25	EH-711120	2-RA424	ER-711169	10-R397	ET-403413	6-Q202		

AKAI

MODEL AA-M33

PC BOARD
SCHEMATIC DIAGRAM

LA1235

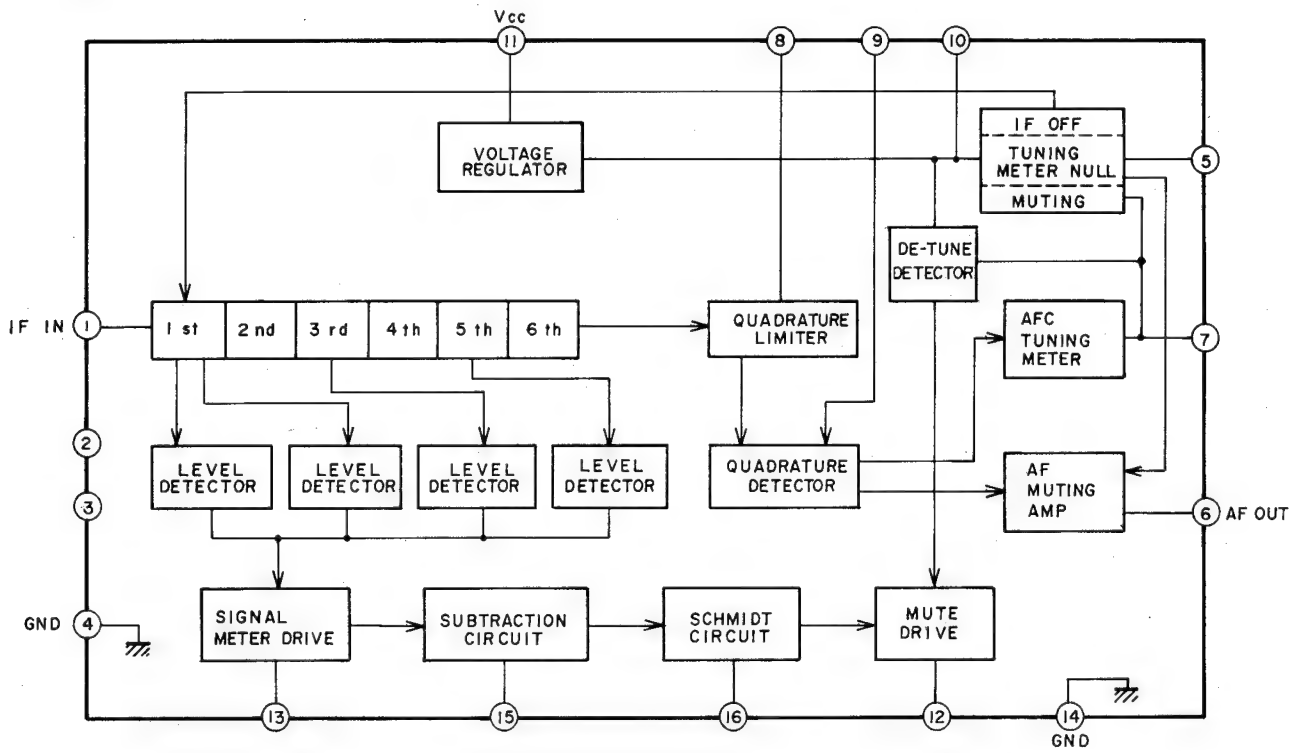

TC4013BP

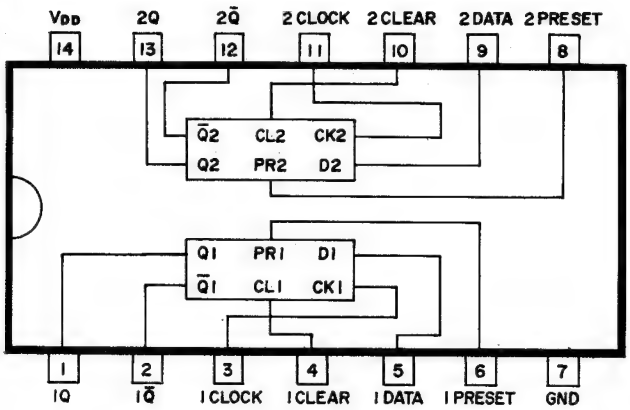

INPUT				OUTPUT	
CLOCK	DATA	CLEAR	PRESET	Qn+1	$\overline{Qn+1}$
⎍	L	L	L	L	H
⎍	H	L	L	H	L
⎎	X	L	L	Qn	$\overline{Qn}$
X	X	L	H	L	H
X	X	H	L	H	L
X	X	H	H	H	H

Qn : OUTPUT BEFORE CLOCK PULSE
Qn+1 : OUTPUT AFTER CLOCK PULSE
X : H or L (DON'T CARE)

TC9154P

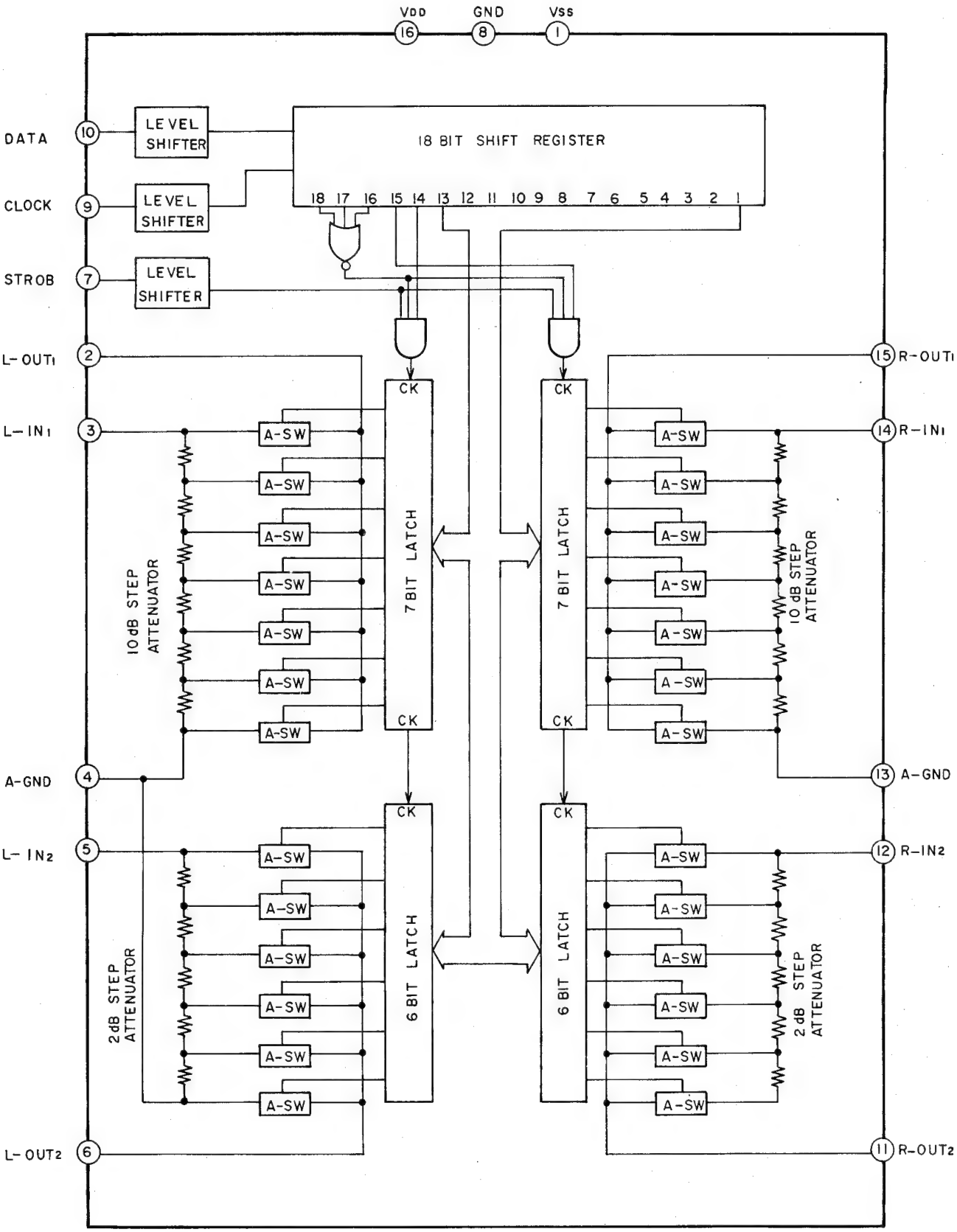
VDD
GND
VSS
16
8
1
DATA
CLOCK
STROB
10
9
7
LEVEL SHIFTER
LEVEL SHIFTER
LEVEL SHIFTER
18 BIT SHIFT REGISTER
18 17 16 15 14 13 12 11 10 9 8 7 6 5 4 3 2 1
L-OUT1
2
L-IN1
3
A-GND
4
L-IN2
5
L-OUT2
6
R-OUT1
15
R-IN1
14
A-GND
13
R-IN2
12
R-OUT2
11
A-SW
CK
7 BIT LATCH
6 BIT LATCH
10dB STEP ATTENUATOR
2dB STEP ATTENUATOR
10 dB STEP ATTENUATOR
2 dB STEP ATTENUATOR

TC9157P

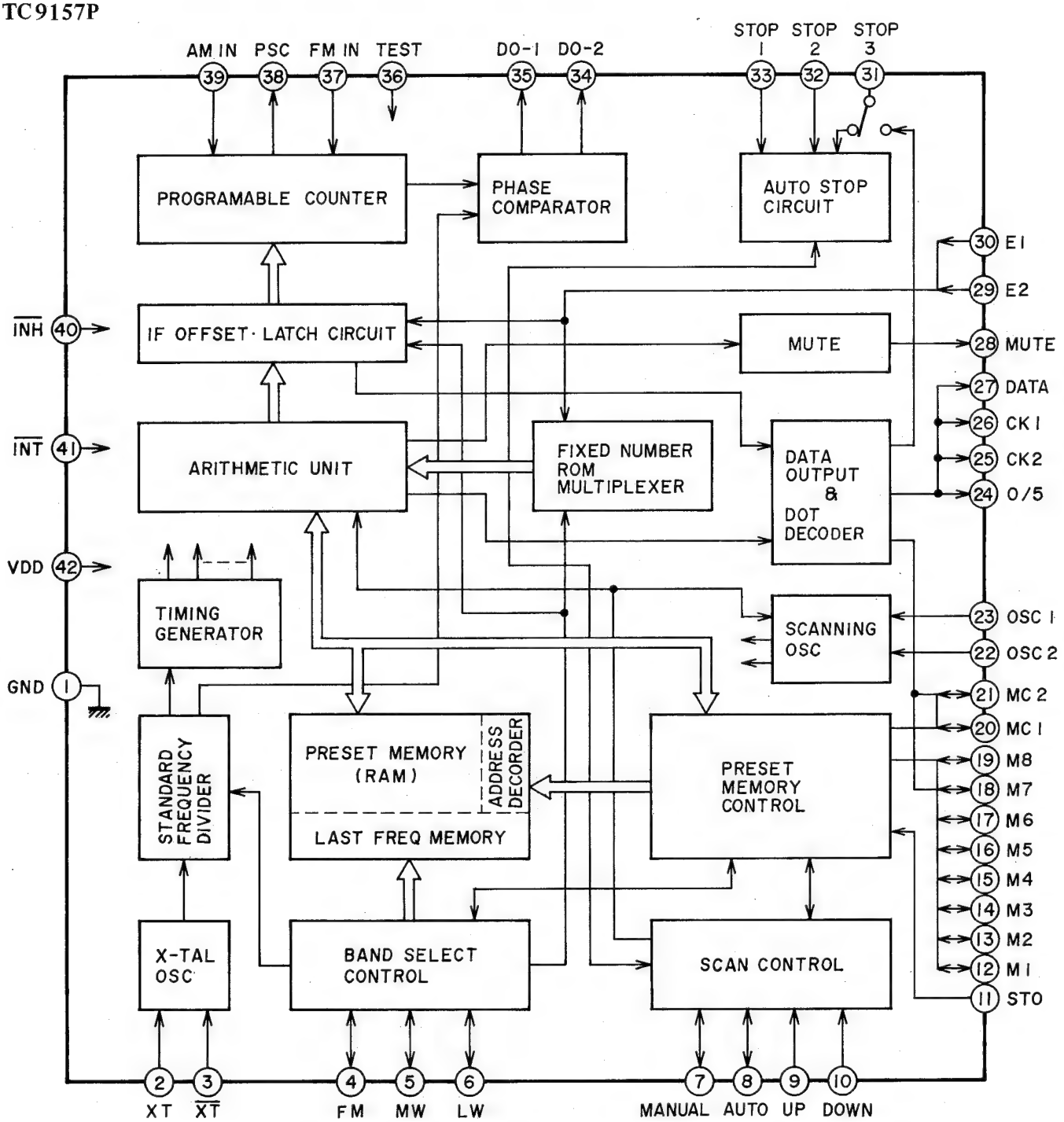
AM IN
PSC
FM IN
TEST
DO-1
DO-2
STOP 1
STOP 2
STOP 3
39
38
37
36
35
34
33
32
31
PROGRAMABLE COUNTER
PHASE COMPARATOR
AUTO STOP CIRCUIT
IF OFFSET · LATCH CIRCUIT
MUTE
ARITHMETIC UNIT
FIXED NUMBER ROM MULTIPLEXER
DATA OUTPUT & DOT DECODER
TIMING GENERATOR
SCANNING OSC
STANDARD FREQUENCY DIVIDER
PRESET MEMORY (RAM)
ADDRESS DECORDER
LAST FREQ MEMORY
PRESET MEMORY CONTROL
X-TAL OSC
BAND SELECT CONTROL
SCAN CONTROL
INH 40
INT 41
VDD 42
GND 1
30 E1
29 E2
28 MUTE
27 DATA
26 CK1
25 CK2
24 O/5
23 OSC1
22 OSC2
21 MC2
20 MC1
19 M8
18 M7
17 M6
16 M5
15 M4
14 M3
13 M2
12 M1
11 STO
2 XT
3 XT
4 FM
5 MW
6 LW
7 MANUAL
8 AUTO
9 UP
10 DOWN

TERMINAL DESCRIPTION OF TC9147P/TC9157P

Pin No.	Symbol	Meaning	Function
1	GND	Ground	
2	XT	X-TAL OSC Terminals	Input Terminal of Standard Frequency OSC (X-TAL: 7.2 MHz)
3	$\overline{XT}$		
4	FM	FM Band Designation Input	Band Selector, Active "H" (Pin ⑥ is not used for Model AA-M33)
5	MW	MW Band Designation Input	
6	LW	LW Band Designation Input	
7	Manual	Manual Tuning Mode	Manual/Auto Tuning Selector, Manual only (Pin ⑨ is open) for Model AA-M33/L.
8	Auto	Auto Tuning Mode	
9	UP	UP Operation Key Input	UP/DOWN Tuning Selector
10	Down	Down Operation Key Input	
11	STO	Memory Store Command Input	Memory at preset memory operation
12 ~ 19	M1 ~ M8	Preset Memory Channel Designation Inputs	Random Access for 16-Preset-Memory with the inputs of MC1/MC2 (M6~8 are not used)
20	MC1	Memory Control Input	⑧ Stations (FM/AM)/ ⑯ Stations (FM + MW + LW) Preset Memory Selector, 10 stations for AA-M33/L.
21	MC2		
22	OSC2	AM OSC Terminal	CR Connector Terminal for AM Search Scan Speed
23	OSC1	FM OSC Terminal	CR Connection Terminal for FM Search Scan Speed
24	0/5	FM 50 kHz Output	Level "H" Output for 50 kHz Step (S. Africa and Europe area)
25	CK2	Receiving Frequency Data Serial Output	Supply Serial Data & Timing Clock to TD6301AP (Receiving Frequency Digital Display Driver)
26	CK1		
27	Data		
28	Mute	Muting Signal Output	Level "H" Output when Muting
29	E2	Area Designation Input	Area Selector (Japan, US, Europe, S. Africa)
30	E1		
31	Stop 3	AM IF Signal Input	Stops Auto Search at AM IF (450kHz) (Not used)
32	Stop 2	Auto Search Stop Signal Input	Stops Auto Search at Level "H" while Level "H" at Stop 1 (Not used)
33	Stop 1	Scan Speed Slow-Down Input	1/2 Speed-Down of Auto Search at Level "H" (Not used)
34	DO-2	Phase Comparator Outpu	Phase Comparator Output (DO1 is not used)
35	DO-1		
36	Test	Test Terminal	Test Mode at Level "H" (Not used)
37	FM in	FM Programmable Counter Input	Connected to Prescaler (TD6104P) Output
38	PSC	Prescaler Control Output	Count-Down (1/30)(1/32) Designation Output for Prescaler
39	AM in	AM Programmable Counter Input	AM Local OSC Signal Input
40	$\overline{INH}$	Inhibit Input	Normal at Level "H" Inhibit at Level "L"
41	$\overline{INT}$	Initialize Input	Normal at Level "H" Initialize at Level "L"
42	V_{DD}	Power Terminal	+5 V is supplied]

TD6104P

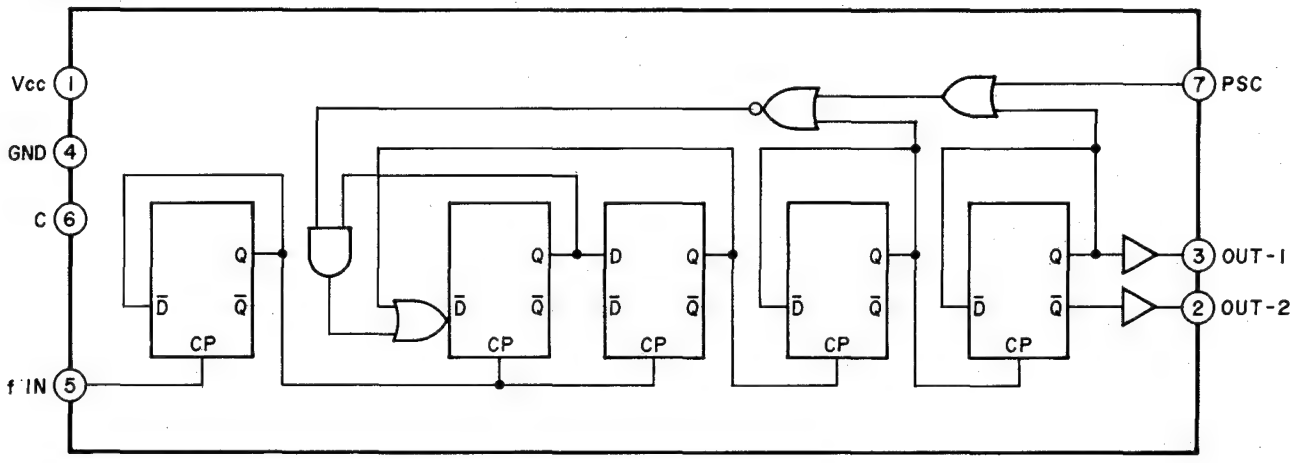

Pin No.	Symbol	Description
5	Fin	FM Local OSC Input
3	OUT-1	Count-Down Frequency Output (fin/30 or fin/32)
2	OUT-2	Inverted Output of OUT-1
7	PSC	Count-Down-Ratio Switch Signal Input 1/32 at Vpsc≧2V 1/30 at Vpsc≦1V
6	C	Bypass condenser terminal for bias circuit
1	Vcc	+5V
4	GND	Ground

TD6301P

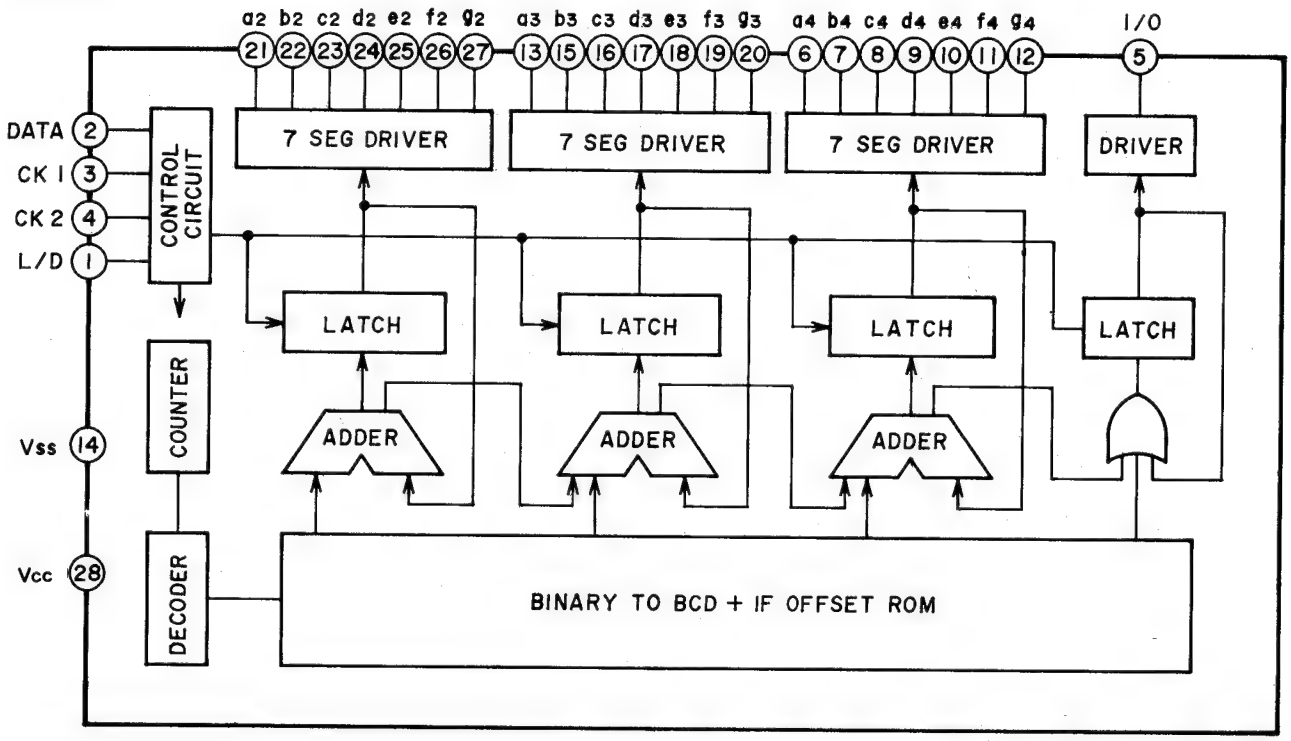

Pin NO.	Symbol	DESCRIPTION
1	L/D	Output Select Signal Input Terminal (To Change the Output for various Display such as LED, FL & LCD)
2	Data	Receiving Frequency Data Input Terminal (Serial Input from System Controller LSI)
3 4	CK1 CK2	Control Timing Input Terminal for Receiving Frequency Data Input (Simultaneously W/Data from System Controller LSI)
5	1/0	Segment Driver Output Terminal for: FM: 100^{s} MHz AM: 1000^{s} kHz
6 ≀ 12	g4 ≀ a4	7 Segment Driver Output Terminals for: FM: 10^{s} MHz AM: 100^{s} kHz
13 15 ≀ 20	g3 ≀ a3	7 Segment Driver Output Terminals for: FM: 1^{s} MHz AM: 10^{s} kHz
21 ≀ 27	g2 ≀ a2	7 Segment Driver Output Terminals for: FM: 100^{s} kHz AM: 1^{s} kHz
14	Vss	−16 V
28	Vcc	−11 V

TC9154P

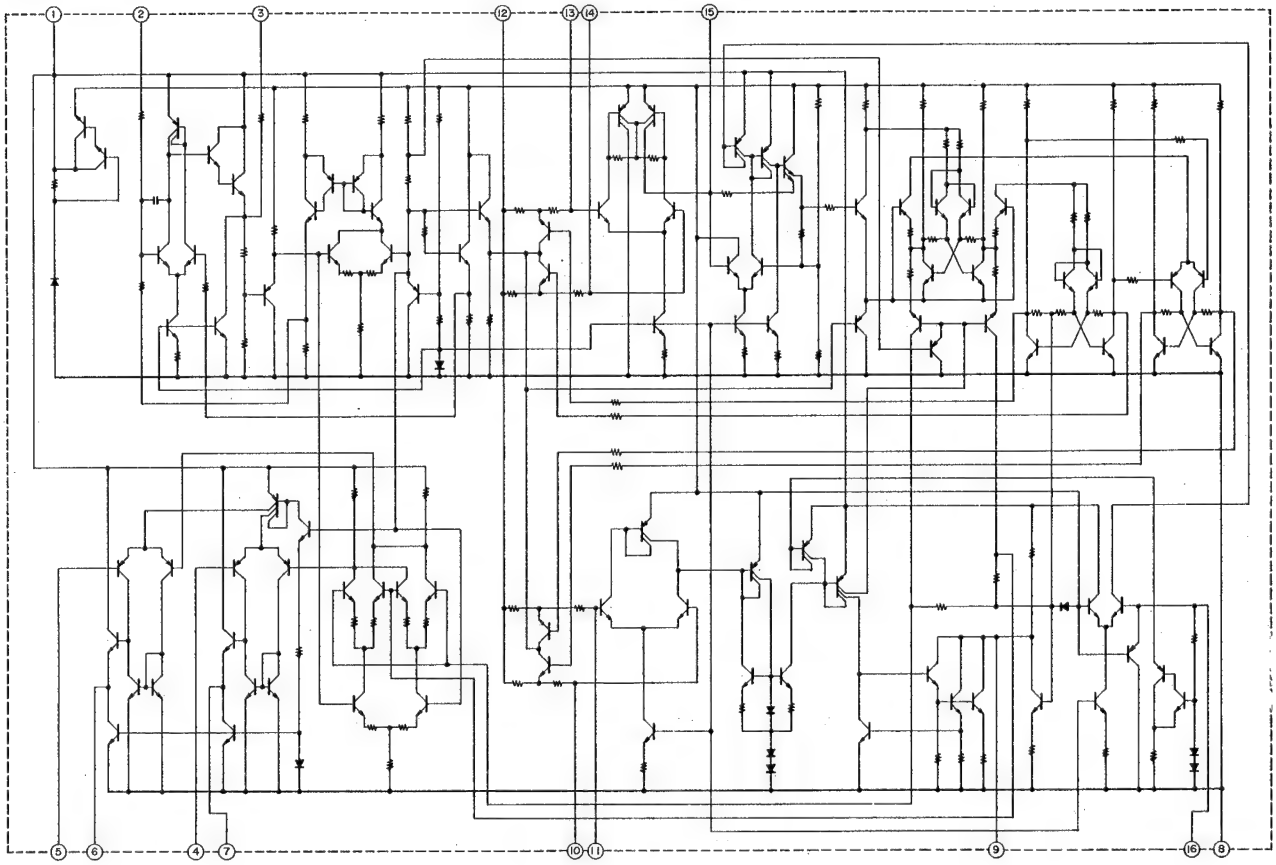

UPD4066BC

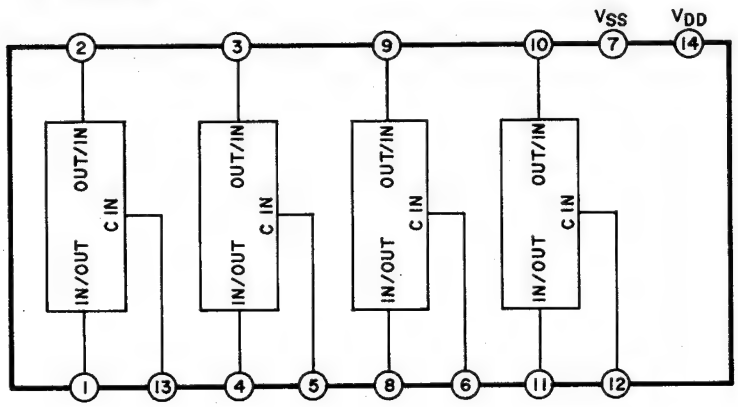

C IN	IMPEDANCE BETWEEN IN/OUT – OUT/IN
H	0.5 to 5×10^2 OHMS
L	MORE THAN 10^9 OHMS

CONTROL	SWITCH
H	ON
L	OFF

TERMINAL DESCRIPTION OF IC TMP47C41N

<table>
<tr><th>Pin No.</th><th>Symbol</th><th>Description</th></tr>
<tr><td>1
2
3
4
5
6
7
8
9
10
11</td><td>B2
B3
B4
B5
B6
B7
B8
B9
B10
B11
B11</td><td>Volume/Balance/Fader Display Dynamic Drive Output
(Dynamic drive by B0, B2–B11 and 1G, 2G)
Active “H”
<table>
<tr><td>VOLUME DISPLAY</td><td>NOTE</td><td>B2</td><td>B3</td><td>B4</td><td>B5</td><td>B6</td><td>B7</td><td>B8</td><td>B9</td><td>B10</td><td>B11</td></tr>
<tr><td>ATTENATION (dB)</td><td>∞</td><td>54
≀
66</td><td>44
≀
52</td><td>36
≀
42</td><td>28
≀
34</td><td>22
≀
26</td><td>16
≀
20</td><td>12
≀
14</td><td>8
≀
10</td><td>4
≀
6</td><td>0
≀
2</td></tr>
<tr><td>BALANCE DISPLAY</td><td>B2</td><td>B3</td><td>B4</td><td>B5</td><td>B6</td><td>B0</td><td>B7</td><td>B8</td><td>B9</td><td>B10</td><td>B11</td></tr>
<tr><td>DIFFERENCE IN ATTENATION BETWEEN R, Lch</td><td>∞</td><td>14
≀
16</td><td>10
≀
12</td><td>6
≀
8</td><td>2
≀
4</td><td></td><td>2
≀
4</td><td>6
≀
8</td><td>10
≀
12</td><td>14
≀
16</td><td>∞</td></tr>
<tr><td>BALANCE</td><td></td><td colspan="4">R<L</td><td>R=L</td><td colspan="4">R>L</td></tr>
</table></td></tr>
<tr><td>12</td><td>MONITOR</td><td>Not used</td></tr>
<tr><td>13
14
15</td><td>CK
DATA
ST</td><td>Control Signal output for Electronic Volume IC (TC9154P), corresponds with Key Input such as Volume VP(DOWN, Balance LEFT/RIGHT and Fader.</td></tr>
<tr><td>16</td><td></td><td>Not used</td></tr>
<tr><td>17
18
19
20</td><td>CD/AUX
TAPE
TUNER
PHONO</td><td>Display Static Drive output,
and Function Switch (in Pre Amp Section) Control Output Active at “H”</td></tr>
<tr><td>21</td><td>Vss</td><td>Connect to GND</td></tr>
<tr><td>22
23</td><td>2G
1G</td><td>Grid (AG,5G) Control output for Volume/Balance/Fader Display Active at “H”.</td></tr>
<tr><td>24
25</td><td>2G
1G</td><td>Key Matrix (Volume UP/DOWN, Balance LEFT/RIGHT, INPUT SELECTOR-FUNCTION, FADER) Scan output</td></tr>
<tr><td>26
27
28
29</td><td>K1
K2
K3
K4</td><td>Input Selector, Volume (UP)
Volume (DOWN), Fader
Balance (LEFT)
Balance (RIGHT)
Key Input</td></tr>
<tr><td>30</td><td>TEST</td><td>Not used (connected to ground)</td></tr>
<tr><td>31
32</td><td>X IN
X OUT</td><td>Check oscillator terminals</td></tr>
<tr><td>33</td><td>RESET</td><td>Reset at “L” when power is turned on.</td></tr>
<tr><td>34</td><td>HOLD</td><td>Hold status at “L” when power is turned off.</td></tr>
<tr><td>35</td><td>TUNER IN</td><td>Tuning (UP/DOWN), preset Station (CH1 to 10) Key Input, “H” while depressing these keys.</td></tr>
<tr><td>36</td><td>REC IN</td><td>External TAPE REC function input, “L” while Tape Deck is in REC/PLAY or REC/PAUSE mode. “H” in play mode.</td></tr>
</table>

Pin. No.	Symbol	Description
37	PLAY IN	External TAPE function input, function switch & display will be switched to TAPE at input “L”, ohterwise “H”.
38	DISK PLAY IN	External PHONO function input, function switch & display will be switched to PHONO at input “L”, otherwise “H”.
39	MUTE	Muting while switching functions for 300m sec, and after the power is turned on for 3 sec. Active at “H”.
40	PLAY/PAUSE OUT	Output “L” for 150m sec±30m sec to set Tapedeck into POAT or PAUSE mode when function is switched from TAPE to other functions or visa velsa. 1) While REC IN is “H”, this pulse stops the Deck and “H” is supplied to PLAY IN from player. 2) While REC IN is “L”, this pulse leads the Deck from REC/PAUSE into REC/PLAY or from REC/PLAY into REC/PAUSE.
41	CUT OUT	Player CUT command output, player will be cut at “L” (150m sec±30m sec pulse) whenever the function is switched from PHONO to other functions such as TAPE, TUNER and CD/AUX.
42	V_{DD}	+5V

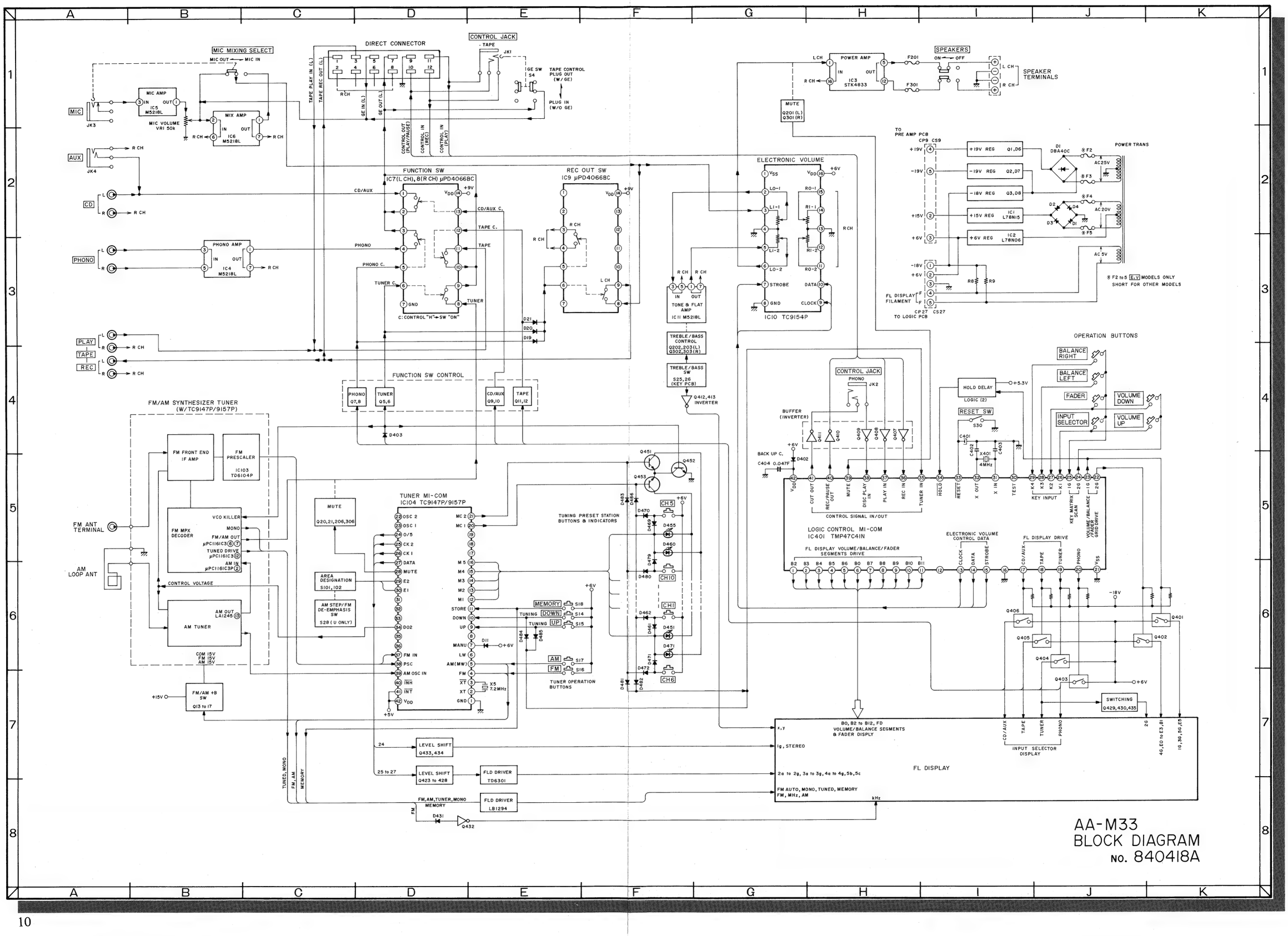
MIC MIXING SELECT
MIC OUT
MIC IN
MIC
JK3
MIC AMP
IC5 M5218L
MIC VOLUME VR1 50k
MIX AMP
IC6 M5218L
AUX
JK4
CD
PHONO
PHONO AMP
IC4 M5218L
PLAY
TAPE
REC
R CH
L CH
DIRECT CONNECTOR
CONTROL JACK
TAPE
JK1
GE SW S4
TAPE CONTROL PLUG OUT (W/ GE)
PLUG IN (W/O GE)
TAPE PLAY IN (L)
TAPE REC OUT (L)
GE IN (L)
GE OUT (L)
CONTROL OUT (PLAY/PAUSE)
CONTROL IN (REC)
CONTROL IN (PLAY)
FUNCTION SW
IC7(L CH), 8(R CH) µPD4066BC
CD/AUX
PHONO
TUNER
TAPE
CD/AUX C.
TAPE C.
PHONO C.
TUNER C.
GND
+9V
C: CONTROL "H" → SW "ON"
REC OUT SW
IC9 µPD4066BC
D21
D20
D19
FUNCTION SW CONTROL
PHONO Q7,8
TUNER Q5,6
CD/AUX Q9,10
TAPE Q11,12
D403
FM/AM SYNTHESIZER TUNER
(W/TC9147P/9157P)
FM FRONT END IF AMP
FM PRESCALER
IC103 TD6104P
FM ANT TERMINAL
AM LOOP ANT
FM MPX DECODER
VCO KILLER
MONO
FM/AM OUT
µPC1161C3 ⑥
TUNED DRIVE µPC1161C3 ⑦
AM IN µPC1161C3 ②
CONTROL VOLTAGE
AM TUNER
AM OUT LA1245 ⑬
COM 15V
FM 15V
AM 15V
+15V
FM/AM +B SW
Q13 to 17
MUTE
Q20,21,206,306
AREA DESIGNATION
S101,102
AM STEP/FM DE-EMPHASIS SW
S28 (U ONLY)
TUNER MI-COM
IC104 TC9147P/9157P
OSC 2
OSC 1
0/5
CK 2
CK 1
DATA
MUTE
E2
E1
D02
FM IN
PSC
AM OSC IN
INH
INT
VDD
MC 2
MC 1
M5
M4
M3
M2
M1
STORE
DOWN
UP
MANU
LW
AM(MW)
FM
XT
XT
GND
X5 7.2MHz
+5V
TUNING PRESET STATION BUTTONS & INDICATORS
MEMORY S18
TUNING DOWN S14
TUNING UP S15
AM S17
FM S16
TUNER OPERATION BUTTONS
D484
D485
D11
Q451
Q452
Q453
D483
D486
+6V
CH5
CH10
CH1
CH6
D470
D469
D455
D460
D479
D480
D462
D461
D451
D471
D472
D481
D482
TONE & FLAT AMP IC11 M5218L
TREBLE/BASS CONTROL Q202,203(L) Q302,303(R)
TREBLE/BASS SW S25,26 (KEY PCB)
Q412,413 INVERTER
ELECTRONIC VOLUME
VSS
VDD
LO-1
LI-1
LI-2
LO-2
RO-1
RI-1
RI-2
RO-2
STROBE
DATA
CLOCK
IC10 TC9154P
MUTE Q201 (L) Q301 (R)
POWER AMP
IC3 STK4833
LCH
RCH
IN
OUT
SPEAKERS
ON — OFF
F201
F301
SPEAKER TERMINALS
L CH
R CH
TO PRE AMP PCB
CP9 CS9
+19V
-19V
-18V
+15V
+6V
+19V REG Q1,D6
-19V REG Q2,D7
-18V REG Q3,D8
+15V REG IC1 L78N15
+6V REG IC2 L78N06
D1 DBA40C
D2
D3
D4
※F2
※F3
※F4
※F5
AC25V
AC20V
AC5V
POWER TRANS
R8
R9
FL DISPLAY FILAMENT
CP27 CS27
TO LOGIC PCB
※ F2 to 5 E,V MODELS ONLY
SHORT FOR OTHER MODELS
OPERATION BUTTONS
BALANCE RIGHT
BALANCE LEFT
FADER
INPUT SELECTOR
VOLUME DOWN
VOLUME UP
CONTROL JACK
PHONO
JK2
BUFFER (INVERTER)
Q411
Q410
Q409
Q408
Q407
BACK UP C.
C404 0.047F
D402
HOLD DELAY
LOGIC (2)
+5.3V
RESET_SW
S30
C401
C402
C403
X401 4MHz
CONTROL SIGNAL IN/OUT
CUT OUT
REC/PAUSE OUT
MUTE
DISC PLAY IN
PLAY IN
REC IN
TUNER IN
HOLD
RESET
X OUT
X IN
TEST
KEY INPUT
KEY MATRIX SCAN
VOLUME/BALANCE /FADER GRID DRIVE
LOGIC CONTROL MI-COM
IC401 TMP47C41N
FL DISPLAY VOLUME/BALANCE/FADER SEGMENTS DRIVE
ELECTRONIC VOLUME CONTROL DATA
FL DISPLAY DRIVE
CLOCK
DATA
STROBE
CD/AUX
TAPE
TUNER
PHONO
Q406
Q405
Q404
Q403
Q401
Q402
-18V
+6V
SWITCHING Q429,430,435
LEVEL SHIFT Q433,434
LEVEL SHIFT Q423 to 428
FLD DRIVER TD6301
FLD DRIVER LB1294
TUNED, MONO
FM, AM
MEMORY
FM, AM, TUNER, MONO MEMORY
D431
Q432
FL DISPLAY
B0, B2 to B12, FD VOLUME/BALANCE SEGMENTS & FADER DISPLY
1g, STEREO
2a to 2g, 3a to 3g, 4a to 4g, 5b, 5c
FM AUTO, MONO, TUNED, MEMORY
FM, MHz, AM
kHz
INPUT SELECTOR DISPLAY
AA-M33
BLOCK DIAGRAM
NO. 840418A

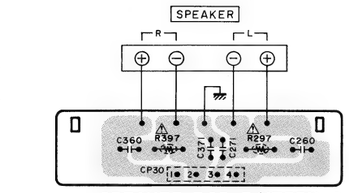

SPEAKER PCB R4175511-2
スピーカー基板 V ONLY

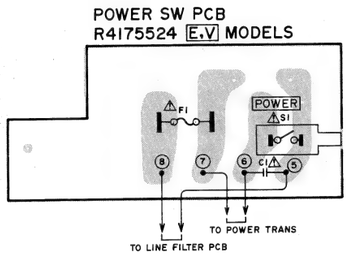

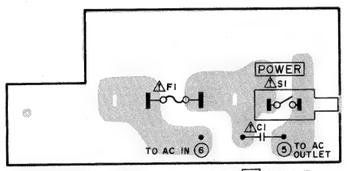

POWER SW PCB R4175525 C MODEL

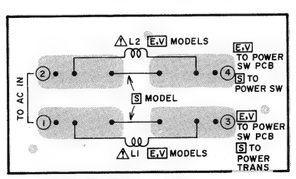

LINE FILTER PCB
R4175526 E,V,S MODELS

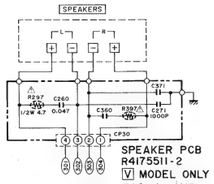

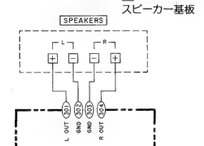

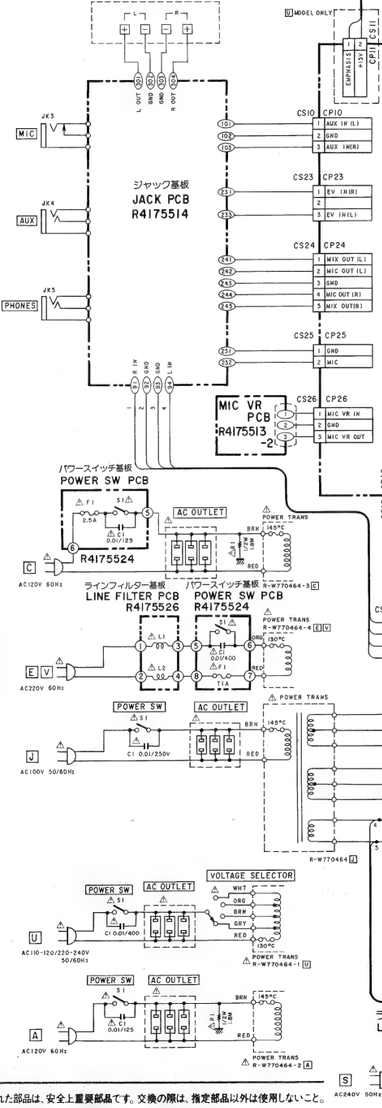

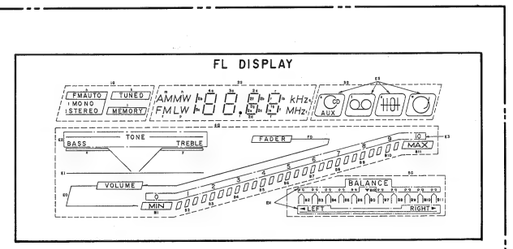

NOTE:
UNLESS OTHERWISE SPECIFIED
ALL RESISTORS IN OHMS 1/4W(J)
ALL CAPACITORS IN μF 50WV(J)
POWER TRANSFORMER IS DIFFERENT ACCORDING TO AREA

備考
C,R の単位(特に指定された部品以外)
抵抗……Ω 1/4W(J),(FS)記号は不燃性部品
コンデンサ……μF 50WV(J)
各電圧は、GND間のDC電圧をデジタルボルトメーターにて測定した値です。

注意: ⚠の付された部品は、安全上重要部品です。交換の際は、指定部品以外は使用しないこと。

WARNING: ⚠INDICATES SAFETY CRITICAL COMPONENTS.
FOR CONTINUED SAFETY, REPLACE SAFETY CRITICAL COMPONENTS ONLY WITH MANUFACTURER'S RECOMMENDED PARTS.

AVERTISSEMENT: ⚠ IL INDIQU LES COMPOSANTS CRITIQUES DE SURETE. POUR MAINTENIR LE DEGRE DE SECURITE DE L'APPAREIL NE REMPLACER LES COMPOSANTS DONT LE FONCTIONNEMENT EST CRITIQUE POUR LA SECURITE QUE PAR DES PIECES RECOMMANDEES PAR LE FABRICANT.

AA-M33
CONNECTION DIAGRAM
NO.5-1 840412A PC

AA-M33

FM TUNER RS873043 [U,A,C,E,S]

FM TUNER RS873040 ([J] MODEL) FMチューナーパック

Only for [V] model, numbers 1XX are used for Transistors, Diodes, Transformers and Coils.

ex. Q1 → Q101
D1 → D101
T1 → T101
L1 → L101

ANT PCB
R4175698-3 [V]
R4175518-3 OTHERS
アンテナ基板

TUNER PCB R4175518-1 OTHERS
チューナー基板 R4175698-1 [V]MODEL ——— : B電源 B(POWER SUPPLY) LINE

VOLTAGES ARE MEASURED AT FM MODE (FM AUTO, FREQUENCY 83MHz, TUNED), IN ( ) AT AM MODE (FREQUENCY 999kHz, TUNED)

各部の電圧値は，FMモード（FM AUTO，83MHz受信状態），( )内の電圧値はAMモード（999kHz受信状態）で測定したDC電圧値です。

NOTE
UNLESS OTHERWISE SPECIFIED
ALL RESISTORS IN OHMS 1/6W(J)
ALL CAPACITORS IN μF 50WV(J)
POWER TRANSFORMER IS DIFFERENT ACCORDING TO AREA

備考
C, Rの単位（特に指定された部品以外）
抵抗……Ω 1/6W(J),
コンデンサ……μF 50WV(J)
各電圧は，GND間のDC電圧をデジタルボルトメーターにて測定した値です。

AA-M33 TUNER SCHEMATIC DIAGRAM

NO. 5-2 840416A(A2) 3C

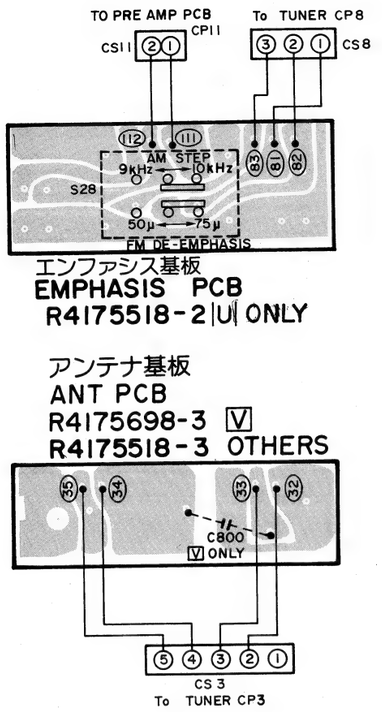

エンファシス基板
EMPHASIS PCB
R4175518-2 [U] ONLY

アンテナ基板
ANT PCB
R4175698-3 [V]
R4175518-3 OTHERS

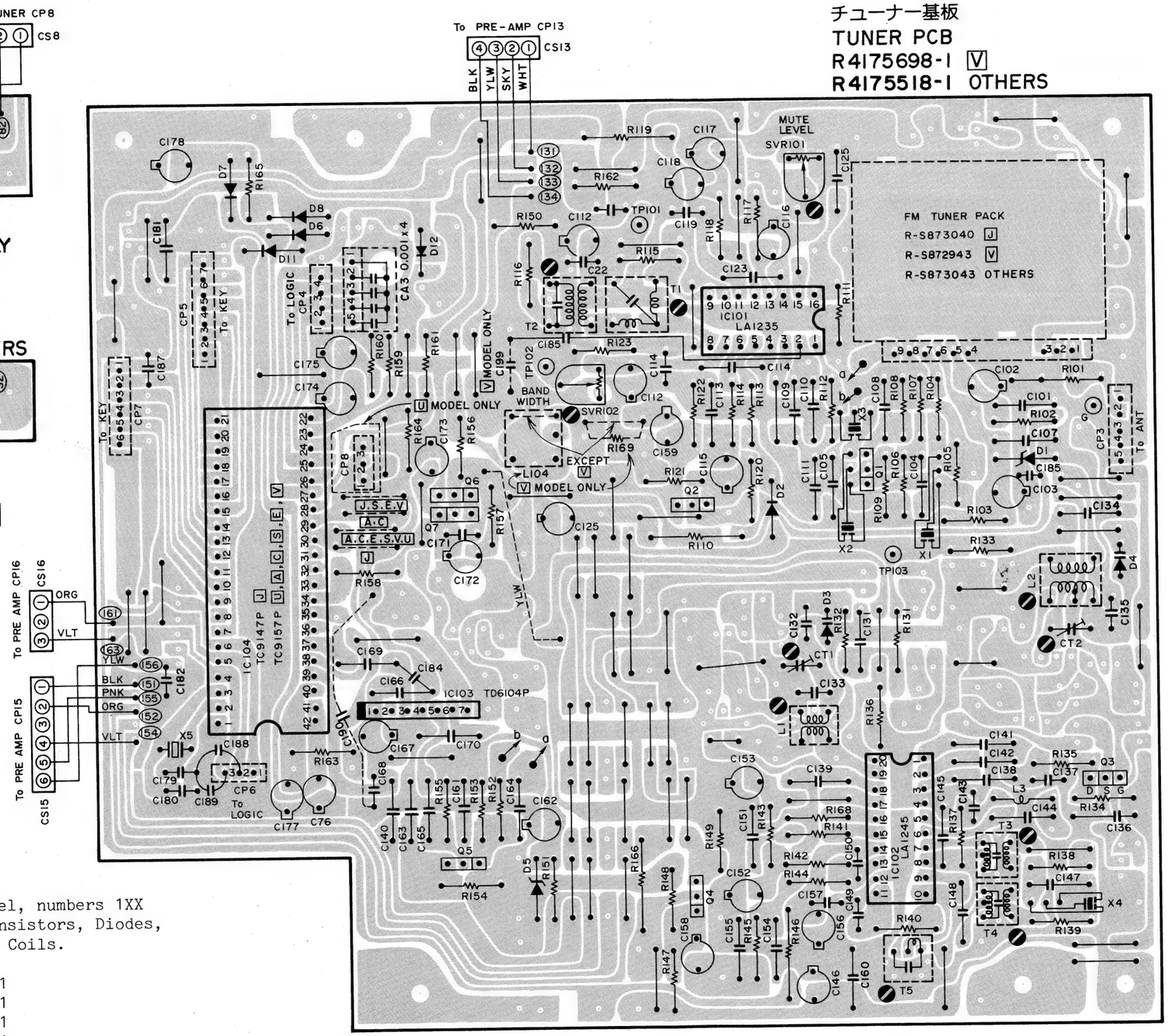

Only for [V] model, numbers 1XX are used for Transistors, Diodes, Transformers and Coils.

ex. Q1 → Q101
D1 → D101
T1 → T101
L1 → L101

LOCATION OF COMPONENTS

〈IC〉

IC101 --------B1
IC102 -------C2
IC103 -------A2
IC104 -------A2

〈TR〉

Q1 ---------C1
Q2 ---------B1
Q3 ---------C2
Q4 ---------B2
Q5 ---------A2
Q6 ---------A1
Q7 ---------A1

〈TERMINAL〉

CP3 --------C1
CP4 --------A1
CP5 -------A1
CP6 --------A2
CP7 --------A1
CP8 --------A1
(13) to (134) -----B1
(15) to (156) -----A2
(161), (163) -----A2

〈ADJ & TEST POINTS〉

L1 (B2) TUNING VOLTAGE
L2 (C2) LOW RANGE SENSITIVITY
CT-1(B2) TUNING VOLTAGE
CT-2(C2) HIGH RANGE SENSITIVITY
T1 (B1) FM IF
T2 (B1) FM IF
T3 (C2) AM IF
T4 (C2) AM IF
T5 (C2) AM IF
SVR101(B1) MUTE LEVEL (TUNED INDICATOR)
SVR102(B1) FM MUTE BAND WIDTH

2SC930E-SP
2SC536AE-SP
2SC536AG-SP
2SC1923

2SK161Y

2

Q1,5 -------2SC930E or 2SC1923
Q2,4 --------2SC536AE-SP
Q3 ---------2SK161Y
Q6,7 -------2SC536AG-SP

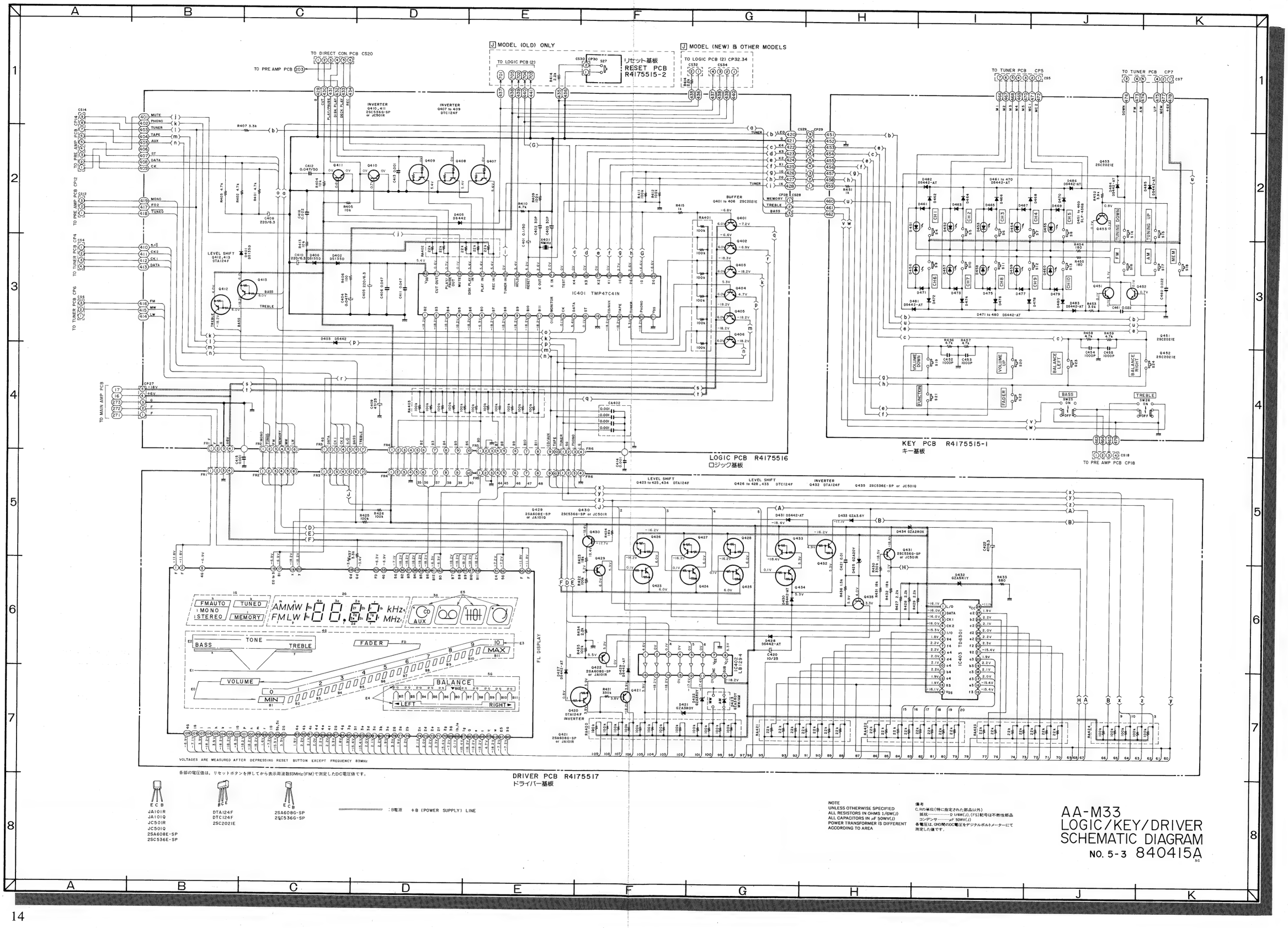
J MODEL (OLD) ONLY
J MODEL (NEW) & OTHER MODELS
TO DIRECT CON PCB CS20
TO PRE AMP PCB 203
TO LOGIC PCB (2)
TO LOGIC PCB (2) CP32,34
リセット基板
RESET PCB
R4175515-2
INVERTER Q410,411 2SC536G-SP or JC501R
INVERTER Q407 to 409 DTC124F
TO TUNER PCB CP5
TO TUNER PCB CP7
TO PRE AMP PCB CP14
TO PRE AMP PCB CP12
TO TUNER PCB CP4
TO TUNER PCB CP6
TO MAIN AMP PCB
MUTE
PHONO
TUNER
TAPE
AUX
ST
DATA
CK
MONO
FM2
TUNER
FM
MW
LW
LEVEL SHIFT Q412,413 DTA124F
BUFFER Q401 to 406 2SC2021E
IC401 TMP47C4IN
TUNING DOWN
TUNING UP
FM
AM
MEM
VOLUME DOWN
VOLUME UP
BALANCE LEFT
BALANCE RIGHT
FUNCTION
FADER
BASS
TREBLE
TO PRE AMP PCB CP18
KEY PCB R4175515-1
キー基板
LOGIC PCB R4175516
ロジック基板
LEVEL SHIFT Q423 to 425,434 DTA124F
LEVEL SHIFT Q426 to 428,433 DTC124F
INVERTER Q432 DTA124F
Q435 2SC536E-SP or JC501Q
Q429 2SA608E-SP or JA101Q
Q430 2SC536G-SP or JC501R
Q431 2SC536G-SP or JC501R
Q432 DZA5R1Y
IC402 LB1254
IC403 TD6301
FL DISPLAY
FMAUTO
TUNED
MONO
STEREO
MEMORY
AM
MW
FM
LW
kHz
MHz
AUX
TONE
BASS
TREBLE
FADER
VOLUME
MIN
MAX
BALANCE
LEFT
RIGHT
VOLTAGES ARE MEASURED AFTER DEPRESSING RESET BUTTON EXCEPT FREQUENCY 83MHz
DRIVER PCB R4175517
ドライバー基板
各部の電圧値は、リセットボタンを押してから表示周波数83MHz(FM)で測定したDC電圧値です。
JA101R
JA101Q
JC501R
JC501Q
2SA608E-SP
2SC536E-SP
DTA124F
DTC124F
2SC2021E
2SA608G-SP
2SC536G-SP
：B電源　+B (POWER SUPPLY) LINE
NOTE
UNLESS OTHERWISE SPECIFIED
ALL RESISTORS IN OHMS 1/6W(J)
ALL CAPACITORS IN uF 50WV(J)
POWER TRANSFORMER IS DIFFERENT ACCORDING TO AREA
備考
C,Rの単位(特に指定された部品以外)
抵抗……Ω 1/6W(J),(FS)記号は不燃性部品
コンデンサ……pF 50WV(J)
各電圧は、GNDへのDC電圧をデジタルボルトメーターにて測定した値です。
AA-M33
LOGIC/KEY/DRIVER
SCHEMATIC DIAGRAM
NO. 5-3 840415A

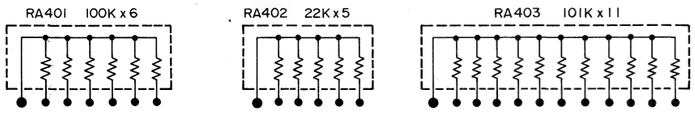

Q401 to 406 ---------2SC2021E
Q407 to 409 ---------DTC124F
Q410, 411 ----------2SC536G-SP
or JC501R
Q412, 413 ---------DTA124F

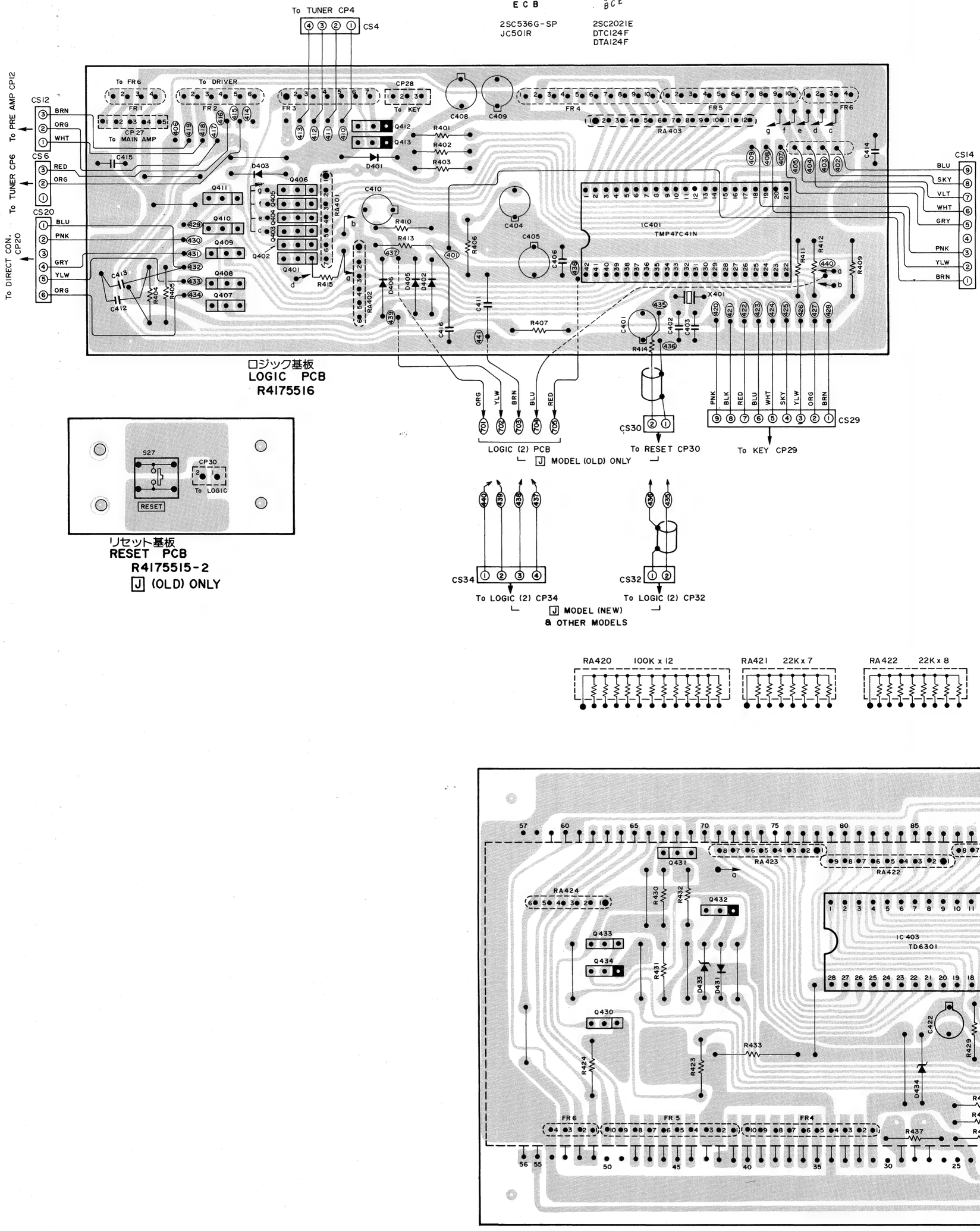

ロジック基板
LOGIC PCB
R4175516

リセット基板
RESET PCB
R4175515-2
J (OLD) ONLY

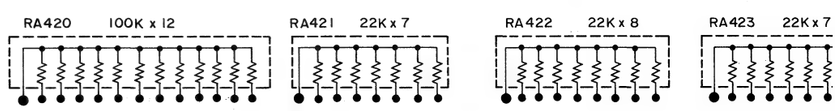

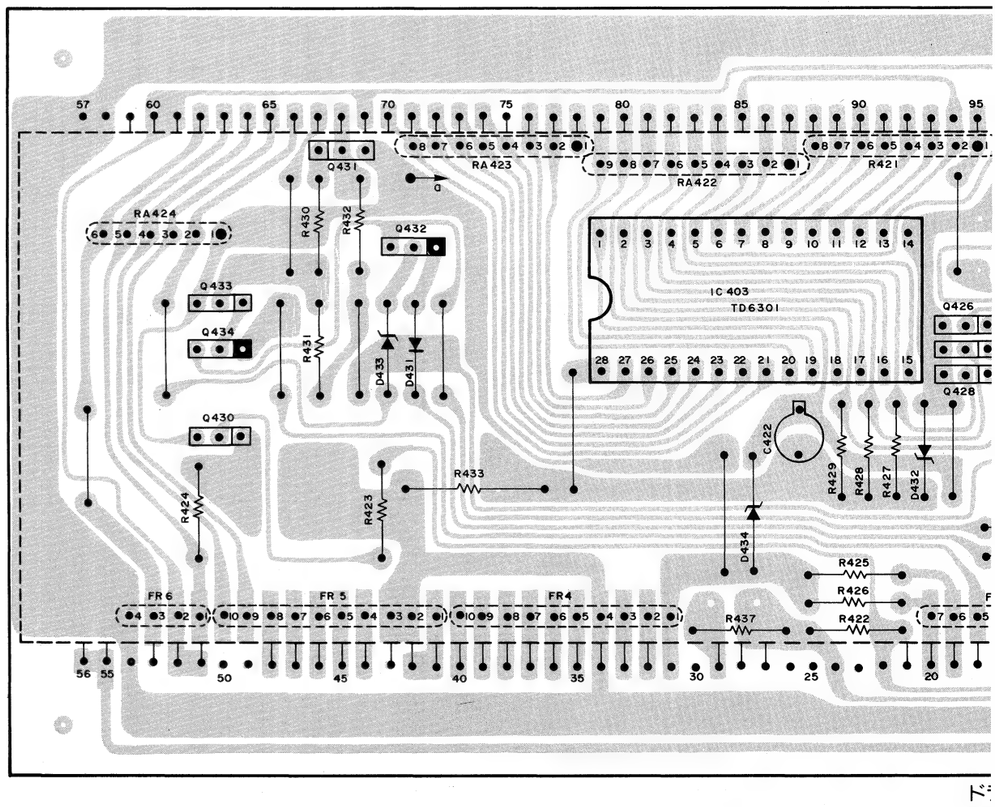

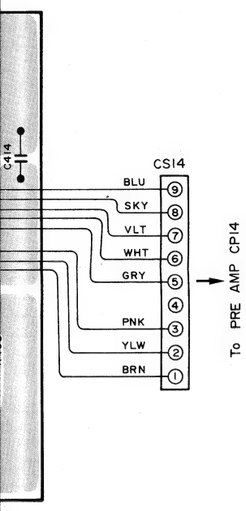

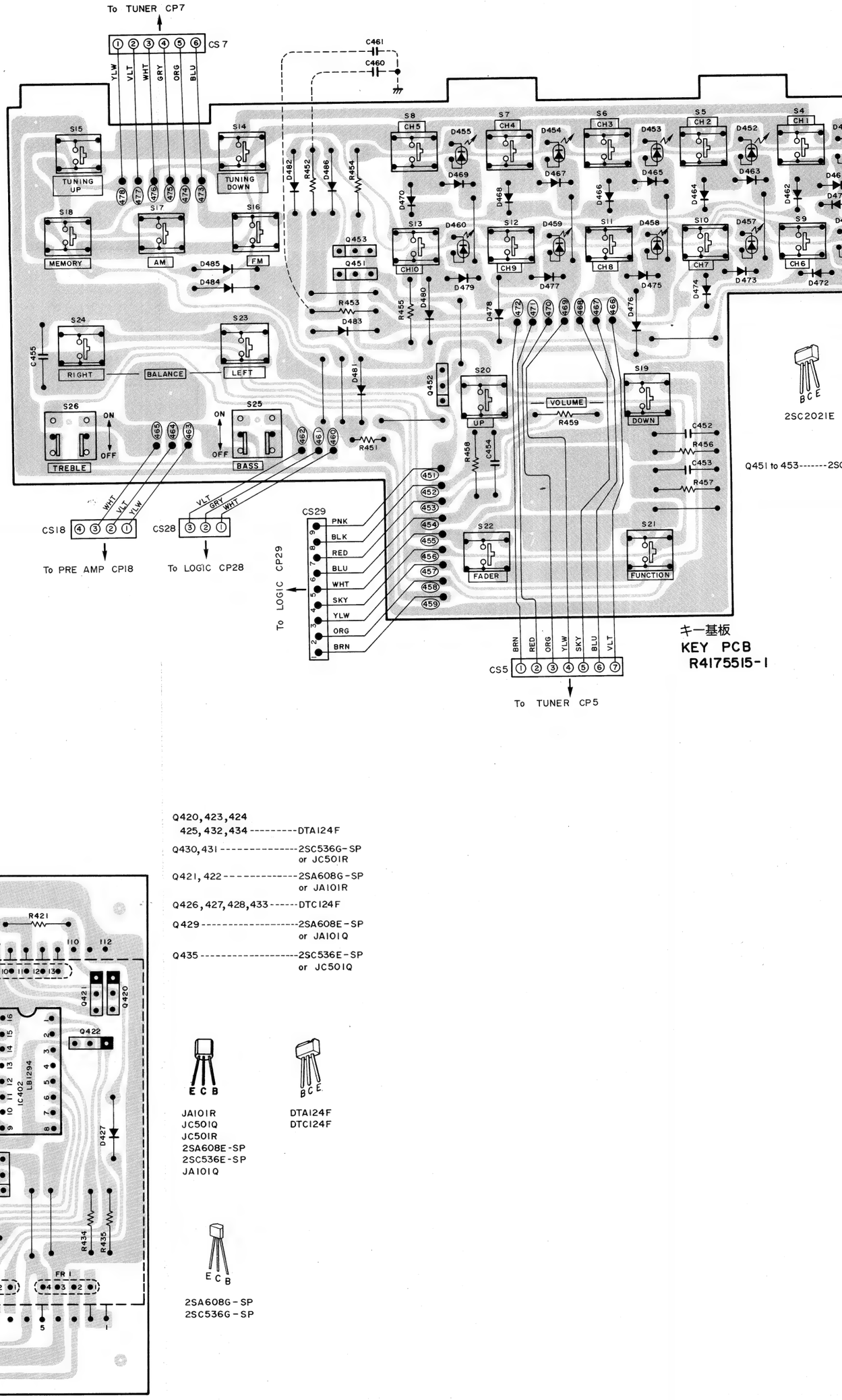

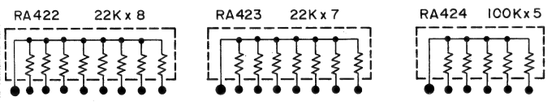

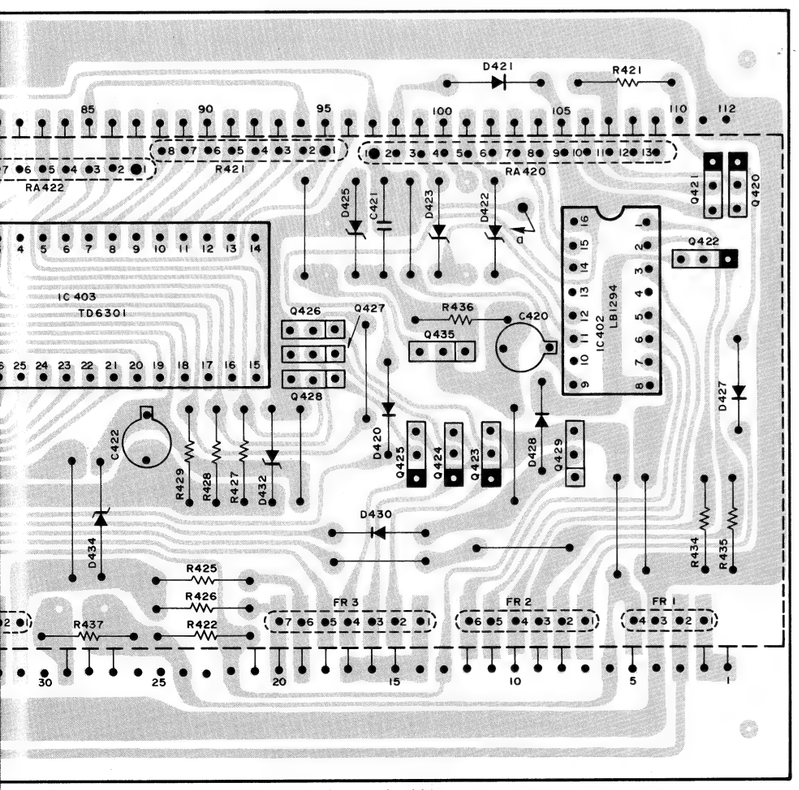

ドライバー基板
DRIVER PCB R4175517

Q420,423,424
425,432,434 ---------DTA124F

Q430,431 ----------2SC536G-SP
or JC501R

Q421,422 ----------2SA608G-SP
or JA101R

Q426,427,428,433------DTC124F

Q429 ----------2SA608E-SP
or JA101Q

Q435 ----------2SC536E-SP
or JC501Q

JA101R
JC501Q
JC501R
2SA608E-SP
2SC536E-SP
JA101Q

DTA124F
DTC124F

2SA608G-SP
2SC536G-SP

AA-M33

PRE AMP PCB R4175512
プリアンプ基板

JACK PCB R4175514
ジャック基板

DIRECT CONNECTOR PCB R417513-1
ダイレクト コネクター基板

MIC VR PCB R4175513-2
マイクVR基板

FUNCTION SW IC7 μPD4066BC

FUNCTION SWITCH (μPD4066BC) CONTROL SWITCHING

※	V	OTHERS
R201.301	2.2K	47
C201.301	470P	62P

※	J	A,C	E,V	S	U
C230, C330	0.0012	0.0018	0.0012	0.0012	0.0012
R252, R352	8.2k	8.2k	4.7k	8.2k	8.2k

TR18 to 20 : JC501R or 2SC1815-GR or 2SC536AG-SP
TR21 : JA101R or 2SA608G-NT

TR205,305 : 2SC536AG-SP or 2SC1815-GR or JC501R

TR206,306 : 2SC2878B

TR5 to 12 JC501R or 2SC536AG-SP or 2SC1815-GR

D15 to 18 DS442

D24 to 29,38 : DS442

D22,23 : GZA9.1X

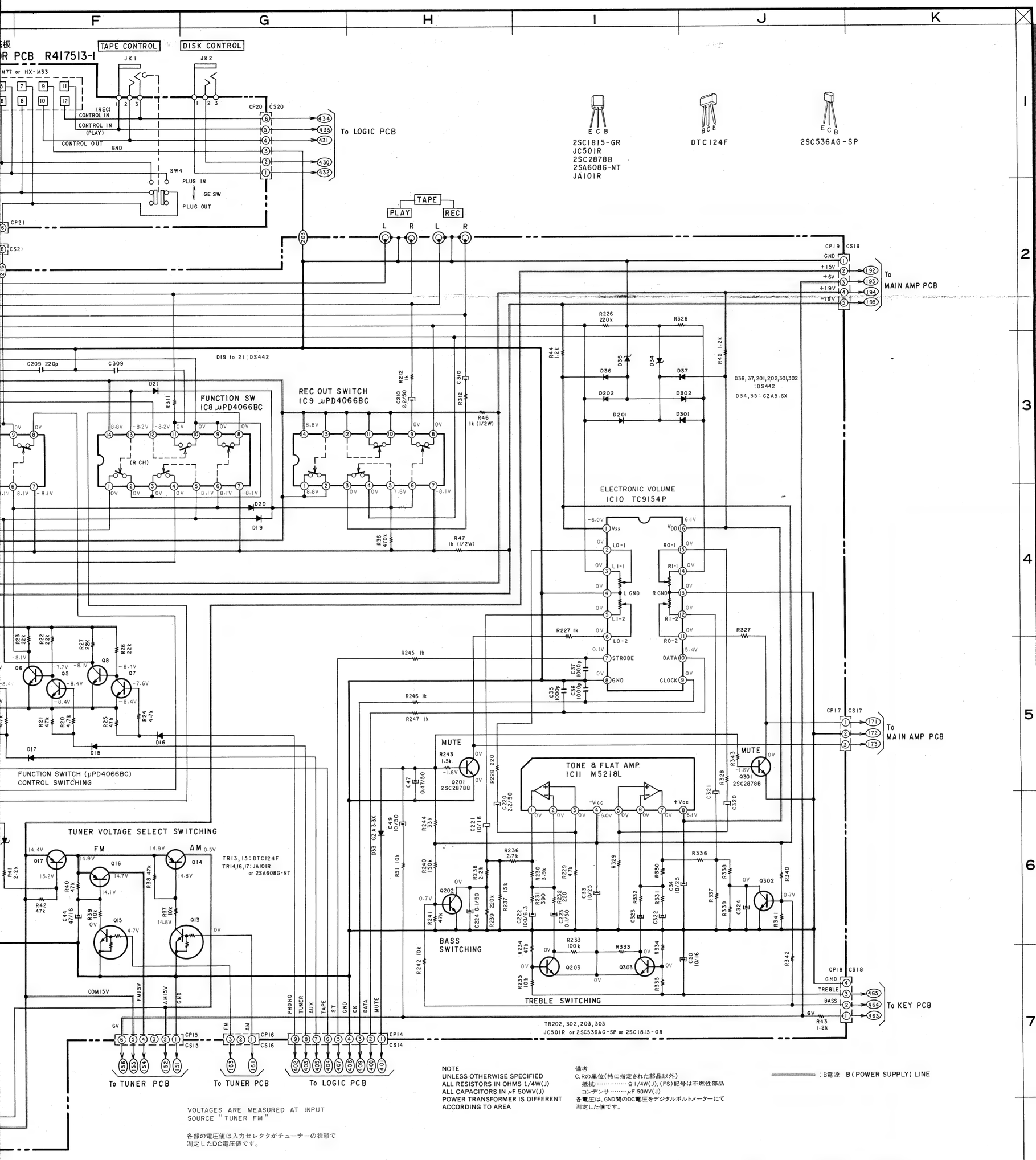

NOTE
UNLESS OTHERWISE SPECIFIED
ALL RESISTORS IN OHMS 1/4W(J)
ALL CAPACITORS IN μF 50WV(J)
POWER TRANSFORMER IS DIFFERENT ACCORDING TO AREA

備考
C, Rの単位(特に指定された部品以外)
抵抗……Ω 1/4W(J), (FS)記号は不燃性部品
コンデンサ……μF 50WV(J)
各電圧は、GND間のDC電圧をデジタルボルトメーターにて測定した値です。

: B電源 B(POWER SUPPLY) LINE

VOLTAGES ARE MEASURED AT INPUT SOURCE "TUNER FM"

各部の電圧値は入力セレクタがチューナーの状態で測定したDC電圧値です。

AA-M33 PRE AMP SCHEMATIC DIAGRAM

NO.5-4 840414A

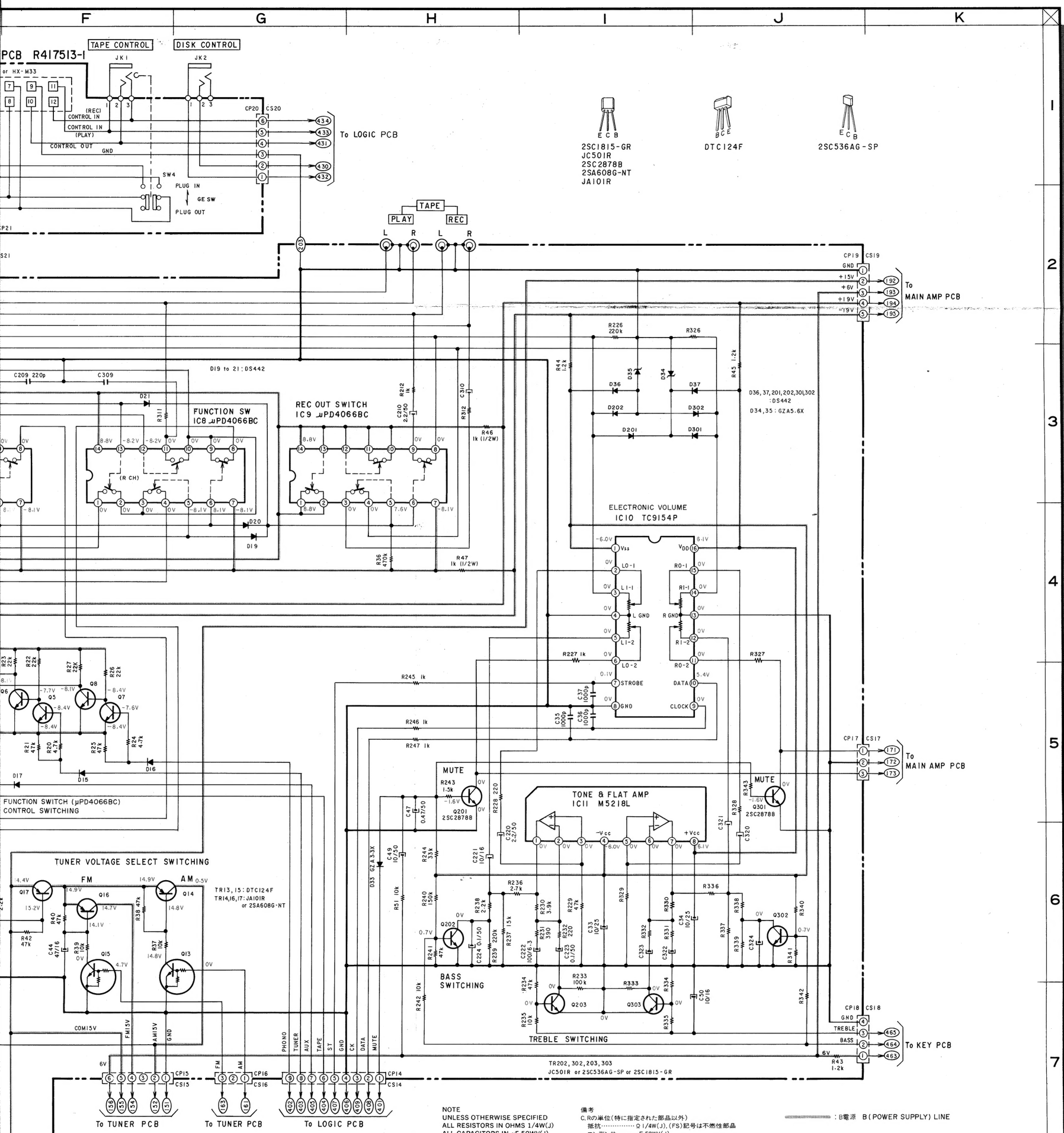

NOTE
UNLESS OTHERWISE SPECIFIED
ALL RESISTORS IN OHMS 1/4W(J)
ALL CAPACITORS IN μF 50WV(J)
POWER TRANSFORMER IS DIFFERENT ACCORDING TO AREA

備考
C, Rの単位(特に指定された部品以外)
抵抗……Ω 1/4W(J), (FS)記号は不燃性部品
コンデンサ……μF 50WV(J)
各電圧は、GND間のDC電圧をデジタルボルトメーターにて測定した値です。

：B電源 B(POWER SUPPLY) LINE

VOLTAGES ARE MEASURED AT INPUT SOURCE "TUNER FM"

各部の電圧値は入力セレクタがチューナーの状態で測定したDC電圧値です。

AA-M33 PRE AMP SCHEMATIC DIAGRAM

NO. 5-4 840414A

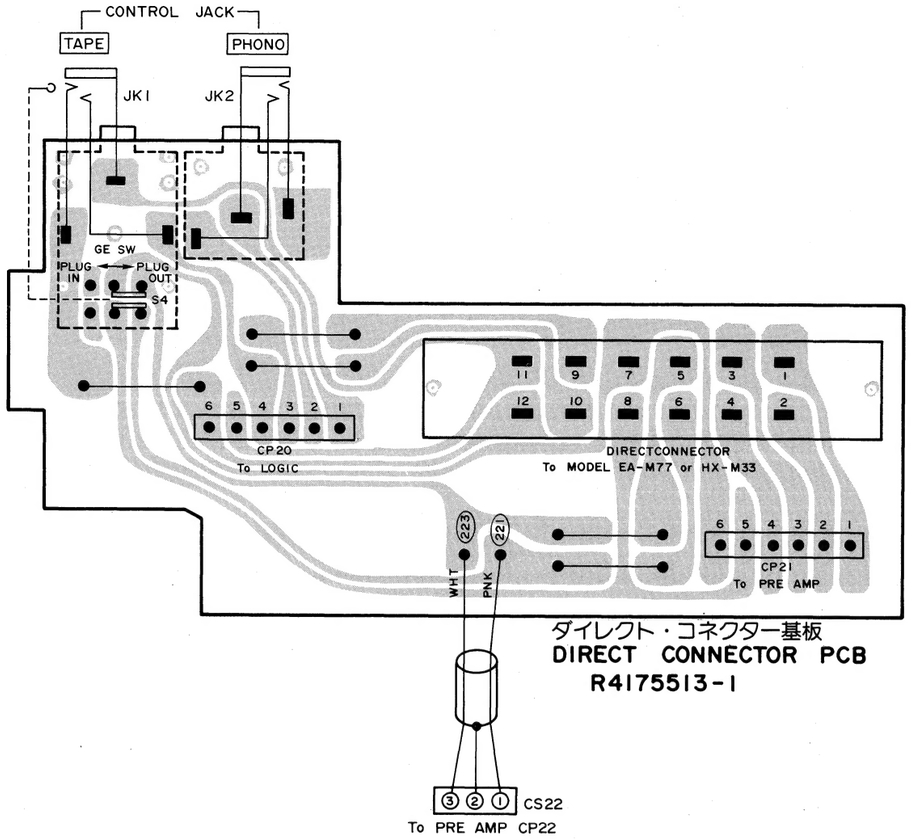

LOCATION OF COMPONENTS

IC

IC4 ------- C3	IC9 ------- C1
IC5 ------- A3	IC10 ------- B1
IC6 ------- A3	IC11 ------- A1
IC7 ------- C1	IC12 ------- B2
IC8 ------- C2	

TR

Q5 -------- C2	Q19 ------- B3
Q6 -------- C2	Q20 ------- B3
Q7 -------- C2	Q21 ------- B3
Q8 -------- C2	Q201 ------ B1
Q9 -------- C2	Q202 ------ A1
Q10 ------- C2	Q203 ------ A1
Q11 ------- C1	Q205 ------ B3
Q12 ------- C1	Q206 ------ B3
Q13 ------- A2	Q301 ------ B1
Q14 ------- A2	Q302 ------ A1
Q15 ------- A2	Q303 ------ A1
Q16 ------- A2	Q305 ------ B3
Q17 ------- A2	Q306 ------ B3
Q18 ------- A3	

TARMINAL

CP10 ------ C3	CP22 ------ A2
CP11 ------ B3	CP23 ------ C1
CP12 ------ B3	CP24 ------ A2
CP13 ------ A3	CP25 ------ A3
CP14 ------ B2	CP26 ------ A3
CP15 ------ A2	
CP16 ------ A2	
CP17 ------ A1	
CP18 ------ A1	
CP19 ------ B2	
(203) ---------- C2	
(211) to (216) ---- C1	

SVR201(B3) MPX FREE RUNNING FREQUENCY

SVR202(B2) STEREO SEPARATION

Q5 to 12, 18 to 20, 202, 203, 205, 302, 303, 305 ------- 2SC536AG-SP or 2SC1815GR or JC501R
Q13, 15 ---------- DTC124F
Q14, 16, 17, 21 ---------- 2SA608G-NT or JA101R
Q201, 206, 301, 306 ---------- 2SC2878B

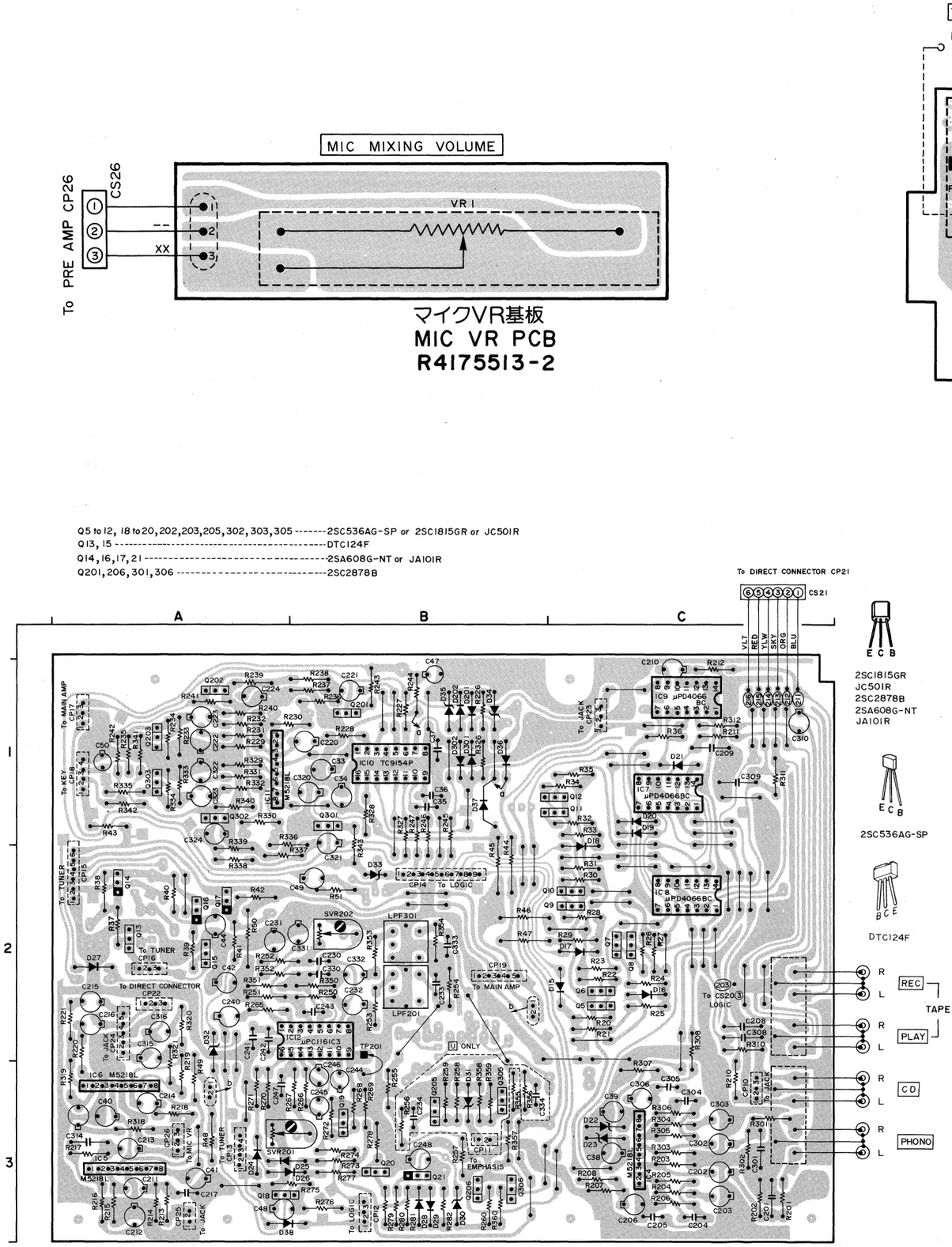

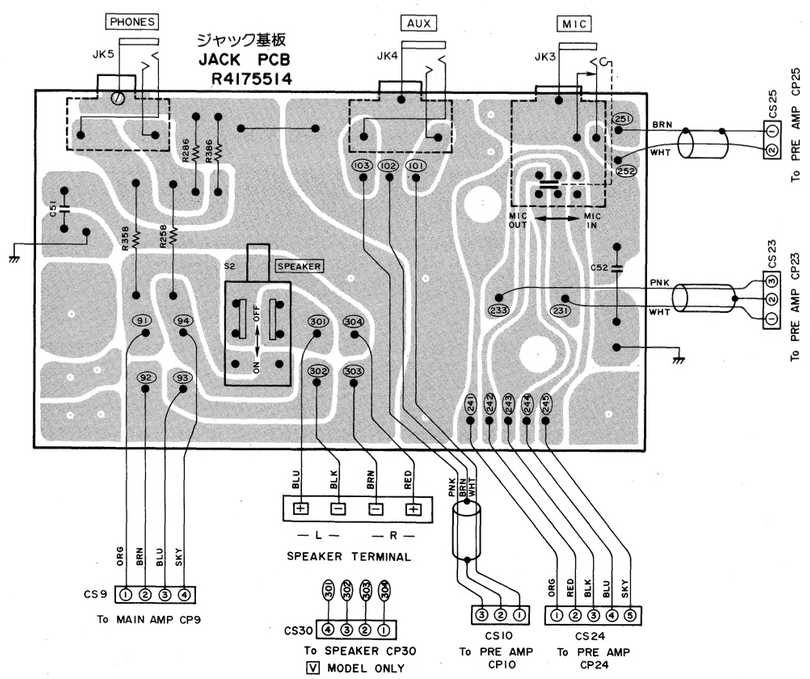

AA-M33

ロジック(2)基板
LOGIC (2) PCB R4175783 [J] MODEL(OLD) ONLY

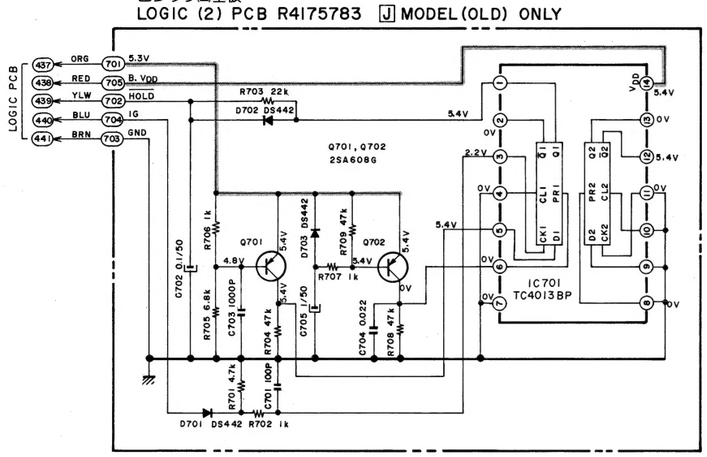

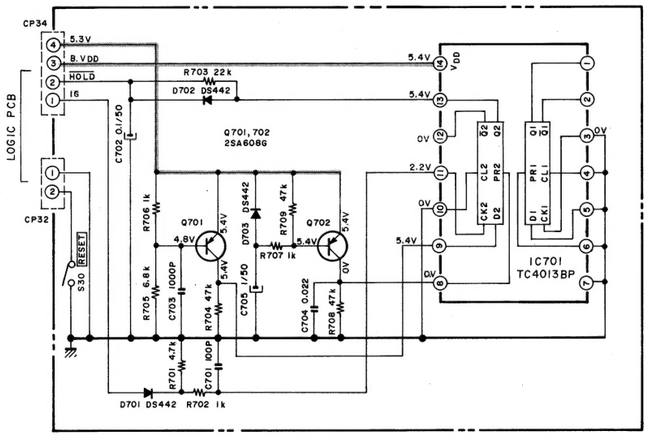

LOGIC (2) PCB R4175784 [J](NEW) & OTHER MODELS
ロジック(2)基板

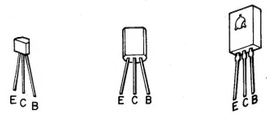

注意: ⚠の付された部品は、安全上重要部品です。交換の際は、指定部品以外は使用しないこと。

WARNING: ⚠ INDICATES SAFETY CRITICAL COMPONENTS.
FOR CONTINUED SAFETY, REPLACE SAFETY CRITICAL COMPONENTS ONLY WITH MANUFACTURER'S RECOMMENDED PARTS.

AVERTISSEMENT: ⚠ IL INDIQUE LES COMPOSANTS CRITIQUES DE SURETE. POUR MAINTENIR LE DEGRE DE SECURITE DE L'APPAREIL NE REMPLACER LES COMPOSANTS DONT LE FONCTIONNEMENT EST CRITIQUE POUR LA SECURITE QUE PAR DES PIECES RECOMMANDEES PAR LE FABRICANT.

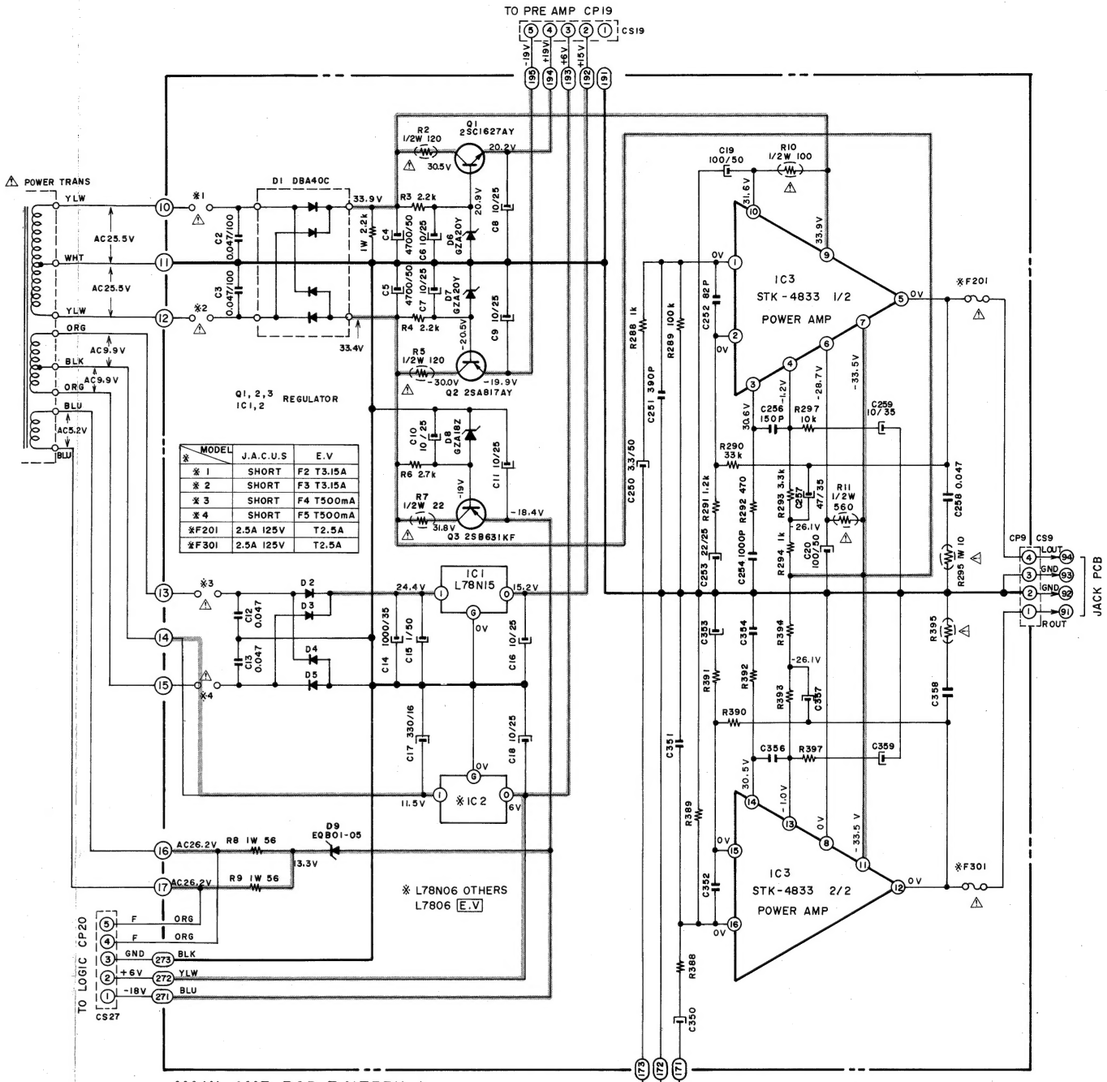

MAIN AMP PCB R41755II-1
メインアンプ基板

VOLTAGES ARE MEASURED AFTER DEPRESSING RESET BUTTON

各部の電圧値はリセットボタンを押した後，測定したDCまたはAC電圧値です。

: B電源 B(POWER SUPPLY) LINE

NOTE
UNLESS OTHERWISE SPECIFIED
ALL RESISTORS IN OHMS 1/4W(J)
ALL CAPACITORS IN μF 50WV(J)
POWER TRANSFORMER IS DIFFERENT ACCORDING TO AREA

備考
C, Rの単位(特に指定された部品以外)
抵抗……Ω 1/4W(J), (FS)記号は不燃性部品
コンデンサ……μF 50WV(J)
各電圧は、GND間のDC電圧をデジタルボルトメーターにて測定した値です。

AA-M33
MAIN AMP/LOGIC(2) SCHEMATIC DIAGRAM
NO.5-5 840413A(A2) 3C

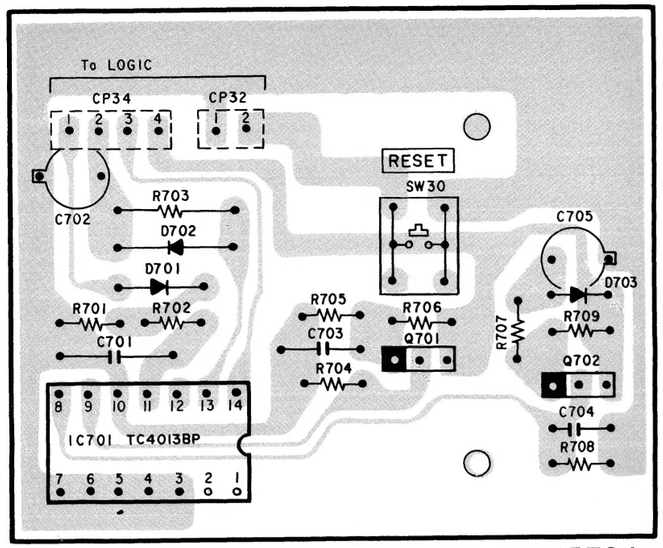

ロジック(2)基板 LOGIC(2) PCB R4175784

J (NEW) & OTHER MODELS

2SA608G

B

= PNP TRANSISTOR

Q701,702---2SA608G

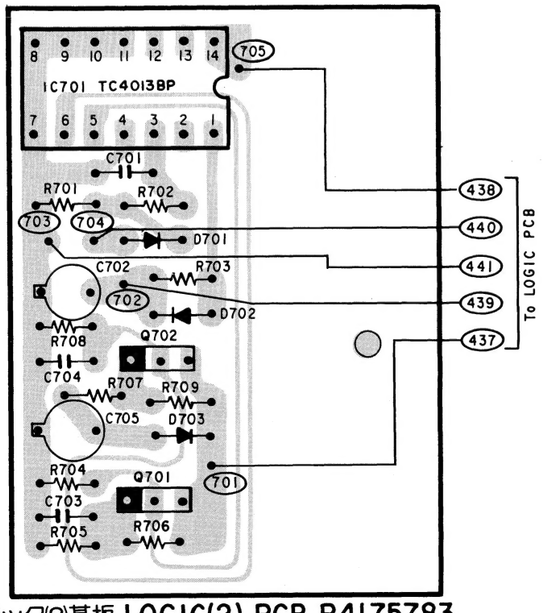

ロジック(2)基板 LOGIC(2) PCB R4175783

J MODEL(OLD) ONLY

2SA608G

B

= PNP TRANSISTOR

Q701,702---2SA608G

2SC1127AY
2SA817AY

2SB631KF

Q1 : 2SC1627AY
Q2 : 2SA817AY
Q3 : 2SB631KF

※ MODEL	J,A,C,U,S	E,V
※1	SHORT	F2 T3.15A
※2	SHORT	F3 T3.15A
※3	SHORT	F4 T500mA
※4	SHORT	F5 T500mA
F201	2.5A 125V	T2.5A
F301	2.5A 125V	T2.5A

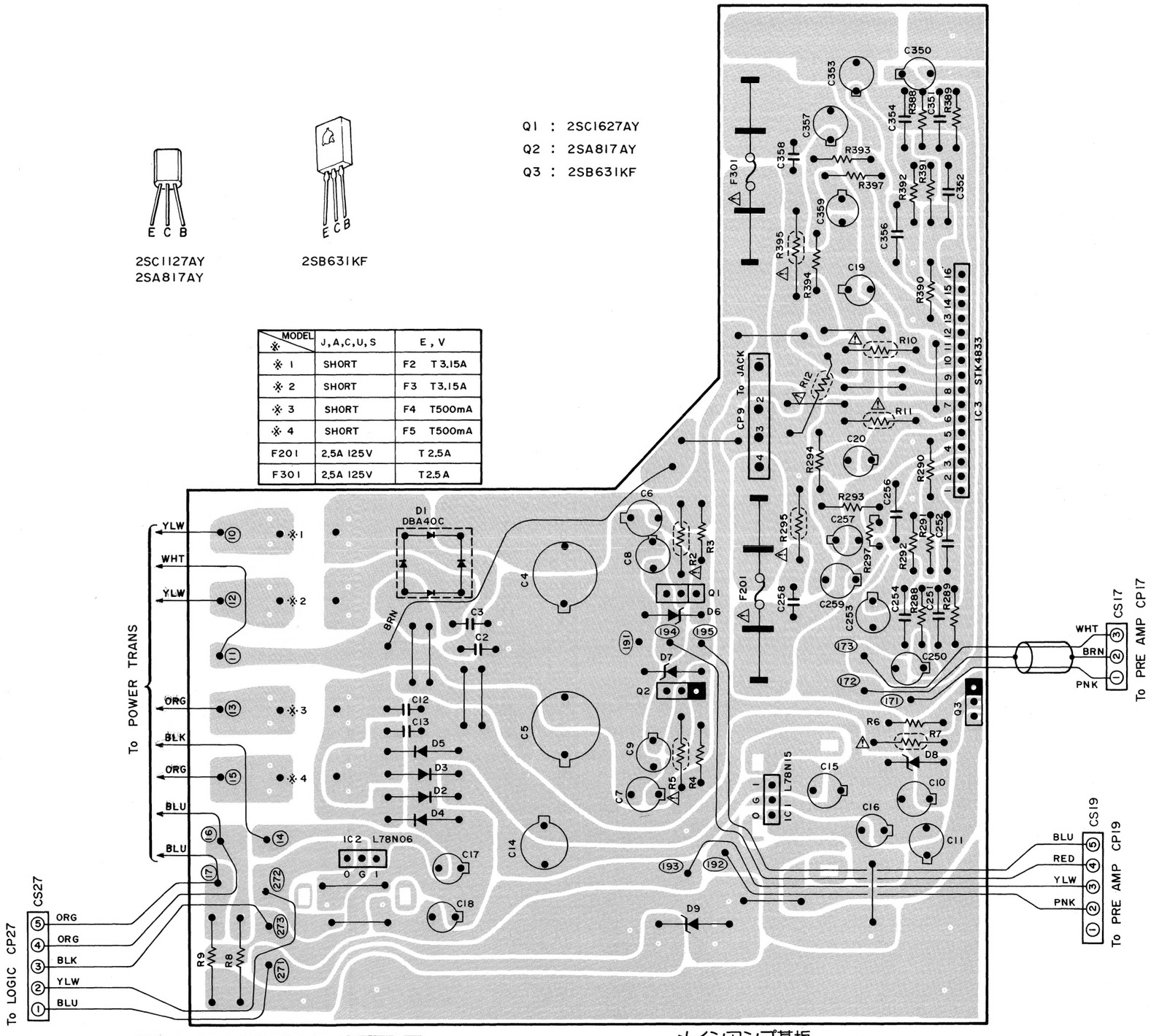

注意：⚠の付された部品は、安全上重要部品です。交換の際は、指定部品以外は使用しないこと。

WARNING: ⚠ INDICATES SAFETY CRITICAL COMPONENTS. FOR CONTINUED SAFETY, REPLACE SAFETY CRITICAL COMPONENTS ONLY WITH MANUFACTURER'S RECOMMENDED PARTS.

AVERTISSEMENT: ⚠ IL INDIQU LES COMPOSANTS CRITIQUES DE SURETE. POUR MAINTENIR LE DEGRE DE SECURITE DE L'APPAREIL NE REMPLACER LES COMPOSANTS DONT LE FONCTIONNEMENT EST CRITIQUE POUR LA SECURITE QUE PAR DES PIECES RECOMMANDEES PAR LE FABRICANT.

メインアンプ基板

MAIN AMP PCB

R4175511-1